IMPERIAL BEACH PIER ENHANCEMENTS PHASE 2

IMPERIAL BEACH, CALIFORNIA

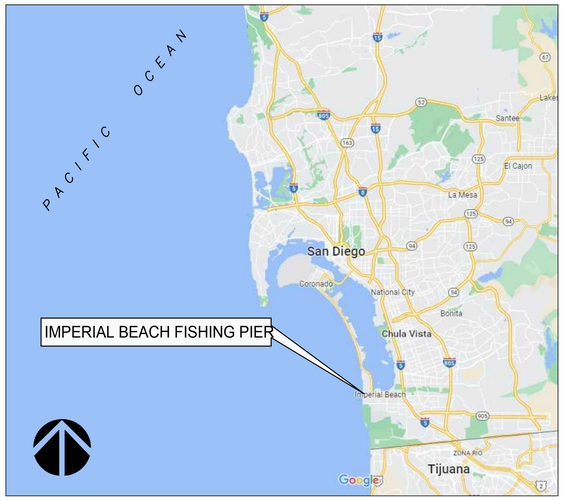

VICINITY MAP
SCALE: NTS

LOCATION MAP
SCALE: NTS

AERIAL VIEW
SCALE: NTS

ADDITIVE BID ITEM NO. 1

WORK TO BE DONE:

WORK TO BE DONE SHALL BE ACCORDING TO DRAWING NO. IB-2022-01 AND SPECIFICATION NO. 2022-07 OF THE SAN DIEGO UNIFIED PORT DISTRICT AND SHALL INCLUDE: DEMOLITION AND DISPOSAL OF VARIOUS TIMBER, STEEL, ELECTRICAL, AND MISCELLANEOUS ELEMENTS; ROUGH CARPENTRY; FINISH CARPENTRY; INSTALLATION OF STRUCTURAL STEEL-FRAMED CANOPY SUPPORTING SPECIAL DECORATIVE PANELS CANOPY; INSTALLATION OF CABLE RAILING; LIGHTING INSTALLATION; ENVIRONMENTAL PROTECTION; INSTALLATION OF CABLE FENCE (ADDITIVE BID ITEM NO. 1); AND OTHER INCIDENTAL ITEMS OF WORK AS SHOWN.

PROJECT ENGINEERS:

moffatt & nichol

Structural Engineers
1660 Hotel Circle North., Suite 500
San Diego, California 92108
Phone (619) 220-6050
Contact: Julia Shockley, E.I.T.
Matthew N. Martinez S.E.

LANDSCAPE ARCHITECT:

CIVITAS

1200 BANNOCK ST.,
DENVER, CO 80204
Phone (303) 571-0053

ELECTRICAL ENGINEER:

CELEBRATING 55 YEARS OF EXCELLENCE
BSE ENGINEERING

9903 BUSINESSPARK AVE., SUITE 104
San Diego, California 92131
Phone (858) 800-6000

DECLARATION OF RESPONSIBLE CHARGE

I HEREBY DECLARE THAT I AM THE ARCHITECT/ENGINEER OF WORK FOR THIS PROJECT, THAT I HAVE EXERCISED RESPONSIBLE CHARGE OVER THE DESIGN OF THE PROJECT AS DEFINED IN SECTION 6703 OF THE BUSINESS AND PROFESSIONS CODE, AND THAT THIS DESIGN IS CONSISTENT WITH CURRENT STANDARDS. I UNDERSTAND THAT THE CHECKING OF PROJECT DRAWINGS AND SPECIFICATIONS BY THE SAN DIEGO UNIFIED PORT DISTRICT IS CONFINED TO A REVIEW ONLY AND DOES NOT RELIEVE ME, AS ARCHITECT/ENGINEER OF WORK, OF MY RESPONSIBILITIES FOR PROJECT DESIGN.

NAME: MATTHEW N. MARTINEZ
CA REGISTRATION NO: 3045
LICENSE EXP. DATE: JUNE 30, 2024
COMPANY NAME: MOFFATT & NICHOL

REGISTERED PROFESSIONAL ENGINEER MATTHEW N. MARTINEZ No. S3045 EXP. 6/30/2024 STRUCTURAL STATE OF CALIFORNIA

moffatt & nichol

RECORD DRAWING REVIEWED BY: ENGINEER OF RECORD DATE:	NOTE: THIS DRAWING MAY BE A REDUCED SCALE PRINT OF THE ORIGINAL DRAWING. UTILIZE GRAPHIC SCALES TO VERIFY IF DRAWING IS A REDUCTION, AND ADJUST SCALES ACCORDINGLY TO THE GRAPHIC SCALES SHOWN.	SPEC NO. 2022-07 WBS NO. EC-0008-01 REFERENCES PROJECT ENGINEER CONTRACTOR CONSTRUCTION STARTED CONSTRUCTION COMPLETED COST INSPECTOR	REVISIONS	DATE / APPROVED	PORT of SAN DIEGO Waterfront of Opportunity	DESIGNED MNM/JKS DRAWN D. BURROW CHECKED MNM/JKS	APPROVAL RECOMMENDED DISTRICT PROJECT MANAGER APPROVED Chris Brooks 8/10/22 DISTRICT MANAGER-DESIGN	SAN DIEGO, CALIFORNIA IMPERIAL BEACH PIER ENHANCEMENTS - PHASE 2 TITLE SHEET	DATE JULY 26, 2022 A/E NO. T-001 SHEET 1 OF 30 DRAWING NO. IB-2022-01 REV. -

Aug 09, 2022 - 4:01pm Q:\SD\212326-03 ib pier enhancements phase 2\20 CADD_Active_Design_01 GENERAL_Working\IB-2022-01-GI-SP-01.dwg

ABBREVIATIONS

&	AND
∠	ANGLE
@	AT
AB	ANCHOR BOLT
ADD'L	ADDITIONAL
ADA	AMERICAN WITH DISABILITY ACT
AISC	AMERICAN INSTITUTE OF STEEL CONSTRUCTION
ALT	ALTERNATE
APPX.	APPROXIMATE
ASME	AMERICAN SOCIETY OF MECHANICAL ENGINEERS
ASTM	AMERICAN SOCIETY FOR TESTING AND MATERIALS
AVG	AVERAGE
AWPA	AMERICAN WOOD PRESERVERS ASSOCIATION
AW	AMERICAN WELDING SOCIETY
BLDG	BUILDING
BLKG	BLOCKING
BO	BOTTOM OF
BOT	BOTTOM
C	CHANNEL
℄	CENTER LINE
CI	CAST IRON
CLR	CLEAR, CLEARANCE
CJ	CONTROL JOINT
CONC	CONCRETE
CONN	CONNECTION
CONSTR	CONSTRUCTION
CONT	CONTINUED, CONTINUOUS
CTR	CENTER
CU FT	CUBIC FEET
CY	CUBIC YARDS
d_b	NOMINAL BAR DIAMETER
DIA, D, Ø	DIAMETER
DBL	DOUBLE
DEMO	DEMOLISH
DIP	DUCTILE IRON PIPE
DIST	DISTANCE
DO	DITTO
DWG(S)	DRAWING(S)

E	ELECTRIC/ELECTRICAL
EA	EACH
ELEV, EL	ELEVATION
ELEC	ELECTRICAL
EMBED	EMBEDMENT
ETC	ETCETERA
EXP	EXPANSION
EXIST	EXISTING
F	FAHRENHEIT
FO	FACE OF
FS	FINISH SURFACE
FT	FEET
FTG	FOOTING
FW	FRESH WATER
GALV	GALVANIZED
HORIZ	HORIZONTAL
H.P.	HIGH POINT
HSS	HOLLOW STRUCTURAL SECTION
IB	IMPERIAL BEACH
ID	INSIDE DIAMETER
IN	INCHES
INFO	INFORMATION
JT	JOINT
LBP	LEAD BASED PAINT
LB(S)	POUND(S)
LG	LONG
LIN	LINEAR
LLH	LONG LEG HORIZONTAL
LLV	LONG LEG VERTICAL
LONGIT	LONGITUDINAL
MAX	MAXIMUM
M.B.	MACHINE BOLT
MC	MISCELLANEOUS CHANNEL
MECH	MECHANICAL
MFR, MFR'S	MANUFACTURER(S)
MH	MANHOLE
MIN	MINIMUM
MISC	MISCELLANEOUS
MLLW	MEAN LOWER LOW WATER
N/A	NOT APPLICABLE
NIC	NOT IN CONTRACT
No, #, NO'S	NUMBER(S)
NTS	NOT TO SCALE
OC	ON CENTER
OD	OUTSIDE DIAMETER
ORIG	ORIGINAL

PCF	POUNDS PER CUBIC FEET
ℙ	PLATE
±	APPROXIMATE DIMENSION CONTRACTOR TO VERIFY
PROP	PROPERTY
PSI	POUNDS PER SQUARE INCH
REFL	REFLECTED
REF	REFERENCE
REINF	REINFORCED, REINFORCING
REQ'D	REQUIRED
REQT	REQUIREMENT(S)
SCHED	SCHEDULE
SDG&E	SAN DIEGO GAS & ELECTRIC
SDUPD	SAN DIEGO UNIFIED PORT DISTRICT
SF	SQUARE FEET
SHT	SHEET
SIM	SIMILAR
SPA	SPACE, SPACED, SPACING
SPEC	SPECIFICATION
SQ	SQUARE
SS	STAINLESS STEEL
SSPC	STRUCTURAL STEEL PAINTING COUNCIL
STA	STATION
STD	STANDARD
STIFF	STIFFENER
SYMM	SYMMETRICAL
T, TEL	TELEPHONE
TB	TIMBER BOLT WITH DOME HEAD
TO	TOP OF
TOS	TOP OF STEEL
TS	TUBE STEEL
TW	TOP OF WALL OR CONCRETE CAP
TYP	TYPICAL
UNO	UNLESS NOTED OTHERWISE
UHMW, UHMWPE	ULTRA HIGH MOLECULAR WEIGHT POLYETHYLENE
VERT	VERTICAL
W/	WITH
WI	WROUGHT IRON
WP	WORK POINT
WPJ	WEAKENED PLANE JOINT
WW	WASTE WATER

PROJECT SHEET INDEX

SHEET No.	REF No.	TITLE
GENERAL		
1	T-001	TITLE SHEET
2	T-002	GENERAL NOTES, DRAWING INDEX AND ABBREVIATIONS
3	T-003	GENERAL PLAN - DESCRIPTION OF WORK
4	T-004	EXISTING PIER SECTIONS
DEMOLITION		
5	SD100	DEMOLITION PLANS
6	SD500	DEMOLITION DETAILS
7	SD510	DEMOLITION PHOTOGRAPHS
8	SD511	DEMOLITION PHOTOGRAPHS AND DETAILS
STRUCTURAL		
9	S-001	GENERAL STRUCTURAL NOTES
10	S-100	DECK LEVEL AND CANOPY LEVEL PLANS
11	S-120	FENCE PLAN AND DETAILS
12	S-501	CANOPY DECK DETAILS
13	S-502	CANOPY FRAMING DETAILS
REFERENCE		
14	R-001	REFERENCE DRAWING

SHEET No.	REF No.	TITLE
LANDSCAPE ARCHITECT		
15	LA001	3D CONCEPT
16	LA002	CANOPY PLAN
17	LA003	GUARDRAIL PLAN
18	LA004	CANOPY DETAILS
19	LA005	GUARDRAIL DETAILS
20	LA006	CABLE FENCE DETAILS
21	LA007	CABLE FENCE GATE DETAILS
22	LA008	CABLE FENCE VIEWS
ELECTRICAL		
23	E-001	ELECTRICAL LEGENDS, GENERAL NOTES
24	E-002	LUMINAIRE SCHEDULE
25	E-003	TITLE 24 LIGHTING COMPLIANCE FORMS -1
26	E-004	TITLE 24 LIGHTING COMPLIANCE FORMS -2
27	E-101	ELECTRICAL SITE PLAN
28	E-201	ENLARGED PLANS
29	E-501	ELECTRICAL DETAILS
30	E-601	SINGLE LINE DIAGRAM

NOTES

A. GENERAL NOTES

1. DIMENSIONS AND ELEVATIONS INDICATED FOR EXISTING CONDITIONS ARE AS MEASURED IN THE FIELD AND SHOULD BE CONSIDERED APPROXIMATE. THE CONTRACTOR SHALL FIELD VERIFY ALL DIMENSIONS, STATIONING AND ELEVATIONS AND NOTIFY THE ENGINEER OF ANY SIGNIFICANT DISCREPANCIES FOUND.
2. PLANS AND DETAILS SHOWN ON THESE DRAWINGS OF THE EXISTING CONDITIONS ARE TAKEN FROM THE ORIGINAL CONSTRUCTION DOCUMENTS AND AS FOUND IN THE FIELD AS OF MAY 27, 2022. THE CONTRACTOR SHALL VERIFY EXISTING CONSTRUCTION PRIOR TO BEGINNING ALL ASSOCIATED WORK.
3. IN CASE OF CONFLICT, NOTES AND DETAILS ON THE DRAWINGS SHALL TAKE PRECEDENCE OVER GENERAL NOTES AND TYPICAL DETAILS.
4. WHERE NO CONSTRUCTION DETAILS ARE SHOWN OR NOTED FOR ANY PART OF THE WORK, THE DETAILS SHALL BE THE SAME AS FOR OTHER SIMILAR WORK.
5. ALL ELEVATIONS SHOWN ON DRAWINGS ARE BASED ON MEAN LOWER LOW WATER DATUM (MLLW). STATION ID 9410230, LA JOLLA CA, EPOCH 1983-2001.
6. THE CONTRACTOR SHALL NOT INTERRUPT UTILITY SERVICES OR BLOCK ACCESS TO RESTROOMS OR RESTAURANT WITHOUT AUTHORIZATION FROM THE DISTRICT WITH 72 HOURS NOTICE MINIMUM.
7. INDICATED SIZE AND LOCATION FOR UTILITIES, EQUIPMENT, AND OTHER IMPROVEMENTS IS APPROXIMATE. THE CONTRACTOR SHALL FIELD VERIFY LOCATION AND SIZES OF UTILITIES.

B. REFERENCE TO EXISTING DRAWINGS

1. EXISTING CONSTRUCTION DRAWING INFORMATION IS AS FOLLOWS:

DRAWING(S) (1)	AGENCY/CONSULTANT DRAWING NUMBER	DATE
MUNICIPAL PIER RECONSTRUCTION	SDUPD DWG NO. 2413	SEPT. 1986
IMPERIAL BEACH FISHING PIER REHABILITATION	SDUPD DWG NO. 2420	DEC. 2004
IMPERIAL BEACH FISHING PIER REPAIR	SDUPD DWG NO. 2427	FEB. 2009
IMPERIAL BEACH PIER DECK REFURBISHMENT	SDUPD DWG NO. 2432	JUN. 2012
LIGHTING REPLACEMENT AT IMPERIAL BEACH PIER	SDUPD DWG NO. IB-2017-01	DEC. 2017

(1) COPIES OF THESE DRAWINGS MAY BE VIEWED AT THE DISTRICT CLERK'S OFFICE.

C. SCHEDULING OF WORK

1. THE SCHEDULING AND PHASING OF THE WORK SHALL BE COMPLETED AS REQUIRED BY THE SPECIFICATIONS. THE CONTRACTOR SHALL COORDINATE TRAFFIC, LAYDOWN AREAS, UTILITY SHUTOFFS, ACCESS TO WORK SITES, MATERIAL AND EQUIPMENT STORAGE, ALTERNATE TRAFFIC ROUTES, PARKING, AND ANY OTHER ITEMS AS REQUIRED BY THE DISTRICT.
2. ALL UTILITIES SHALL BE PROTECTED IN PLACE, UNLESS OTHERWISE SHOWN OR SPECIFIED, DURING ALL PHASES OF CONSTRUCTION. IN THE EVENT OF A UTILITY RELATED EMERGENCY IMMEDIATELY CONTACT THE DISTRICT.

   PORT OF SAN DIEGO
   3165 PACIFIC HIGHWAY
   SAN DIEGO, CA 92101
   (619) 686-6200

3. PIER ACCESS FOR PEDESTRIANS AND VEHICLES SHALL REMAIN OPEN AND AVAILABLE BETWEEN 6:00 AM - 10:00 PM. CONTRACTORS SHALL PROVIDE A MINIMUM 10-FOOT WIDE LANE ON THE PIER WHILE WORKING BETWEEN THE HOURS OF 6:00 AM - 10:00 PM.
4. COMPLETE CLOSURE (FULL PIER WIDTH) OF ALL OR PORTION OF THE PIER SHALL BE PERMISSABLE ONLY BETWEEN THE HOURS OF 10:00 PM - 6:00 AM. COMPLETE PIER CLOSURE SHALL BE CONTINGENT ON PRIOR APPROVAL AND POSTING OF "PIER CLOSURE SIGNS" A MINIMUM OF 72 HOURS PRIOR TO THE PROPOSED PIER CLOSURE.
5. THE CONTRACTOR'S STORAGE STOCKPILE AND PARKING AREA IS SHOWN ON THE LOCATION MAP ON SHEET T-001, SUBJECT TO CITY OF IB APPROVAL. THE ACTUAL BOUNDARIES SHALL BE COORDINATED WITH AND APPROVED BY THE DISTRICT PRIOR TO MOBILIZATION.
6. NO STOCKPILING OF CONSTRUCTION-RELATED MATERIALS OR DEBRIS STORAGE IS PERMITTED ON THE PIER OR THE PUBLIC PARK AT THE PIER ENTRANCE.

D. DEMOLITION AND WORKING CONDITIONS

1. PRIOR TO COMMENCING DEMOLITION, THE CONTRACTOR SHALL VERIFY THE LOCATION AND SIZE OF ANY EXISTING UTILITIES SERVING OR SUPPORTED BY THE STRUCTURE. VERIFICATION SHALL BE MADE FROM AVAILABLE SOURCES SUCH AS, BUT NOT LIMITED TO, UTILITY COMPANIES, AS-BUILT DRAWINGS, SITE INVESTIGATIONS, ETC.
2. ALL ITEMS INDICATED "REMOVE AND SALVAGE" FOR RE-USE SHALL BE TAGGED, STORED AND PROTECTED. THESE ITEMS SHALL BE REINSTALLED BY THE CONTRACTOR WHERE INDICATED AFTER COMPLETION OF ASSOCIATED WORK.
3. UNLESS NOTED OTHERWISE, MATERIAL TO BE "REMOVED" SHALL BE REMOVED AND DISPOSED OF AT A LICENSED DISPOSAL SITE OFF DISTRICT TIDELANDS AT CONTRACTOR'S EXPENSE.
4. CONTRACTOR SHALL LIMIT LOADING ON THE PIER AS INDICATED ON SHEET S-001 AND THE SPECIFICATIONS. CONCENTRATED LOADS FROM TRUCKS, CRANES AND OTHER EQUIPMENT SHALL BE PLACED OVER PILE CAPS. OUTRIGGERS FOR MOBILE TRUCK CRANES SHALL USE SPREADER BEAMS OR OTHER MEANS TO DISTRIBUTE LOAD OVER PILE CAPS.
5. THE CONTRACTOR SHALL PROTECT THE EXISTING STRUCTURE AND IMPROVEMENTS DURING THE WORK. PROVIDE BRACING, SHORING AND SPREADER BEAMS AS NECESSARY FOR CONSTRUCTION LOADS.
6. TEMPORARY SHORING AND BRACING. PROVIDE TEMPORARY SHORES, GUYS, BRACES, AND OTHER SUPPORTS DURING ERECTION TO KEEP STRUCTURAL STEEL SECURE, PLUMB, AND IN ALIGNMENT AGAINST TEMPORARY CONSTRUCTION LOADS, LOADS INDUCED BY WIND, EARTHQUAKE, WAVES AND DESIGN LOADS. DESIGN AND ADEQUACY OF SHORING SHALL BE THE RESPONSIBILITY OF THE CONTRACTOR. REMOVE TEMPORARY SUPPORTS WHEN PERMANENT STRUCTURAL STEEL, CONNECTIONS AND BRACING ARE IN-PLACE, UNLESS OTHERWISE INDICATED.
7. CERTAIN ASPECTS OF THE WORK REQUIRES UNDERDECK PIER ACCESS OVER WATER. THE WORK WILL REQUIRE UTILIZATION OF A BRIDGE SNOOPER OR EQUIV. DEVICE, AND/OR ERECTION OF FIXED SCAFFOLDING
8. REMOVAL OF DECKING FOR ACCESS TO THE UNDERSIDE OF THE PIER DECK SHALL BE COORDINATED TO COMPLY WITH PUBLIC ACCESS REQUIREMENTS INDICATED IN NOTE C.3. GAPS IN THE PIER DECK SHALL NOT BE LEFT OPEN FOR MORE THAN AN 8 HOUR PERIOD OR UNATTENDED WITH ALL NECESSARY MEASURES TO PROTECT WORKERS AND MAINTAIN PUBLIC SAFETY.
9. REMOVAL OF RAILINGS/FENCING SHALL BE PERFORMED IN SUCH A MANNER SO AS TO MAINTAIN PUBLIC SAFETY, PROVIDE TEMPORARY DEVICES TO SERVE AS A RAILING/FENCING, WORK SHALL BE COMPLETED ON RAILINGS/FENCING SUCH THAT TEMPORARY SAFETY RAILING/FENCING IS NOT REQ'D FOR MORE THAN A 72 HOUR PERIOD.
10. REMOVAL OF DECKING AND DECK SPIKES SHALL BE PERFORMED IN SUCH A MANNER SO AS TO PREVENT SPLITTING OF SUPPORTING TIMBER STRINGERS OR ADJACENT PLANKS. TIMBER MEMBERS DAMAGED AS A RESULT OF THE DEMOLITION PROCESS SHALL BE REPLACED AT CONTRACTOR'S EXPENSE.
11. ON SITE WELDING REQUIRES THAT A REPRESENTATIVE OF THE FIRE DEPARTMENT BE PRESENT. THE CONTRACTOR SHALL COORDINATE WITH THE DISTRICT PRIOR TO WELDING ACTIVITIES.

E. ENVIRONMENTAL NOTES

1. THE CONTRACTOR SHALL PROVIDE FIXED (NOT FLOATING) SCAFFOLDING TO SUPPORT WORKERS, AND THE CONTRACTOR SHALL PROVIDE A SYSTEM DESIGNED TO CATCH AND RETRIEVE ALL DEMOLITION AND CONSTRUCTION MATERIAL GENERATED BY THIS PROJECT. DEMOLITION AND CONSTRUCTION MATERIAL SHALL NOT BE ALLOWED TO FALL INTO THE OCEAN.
2. ALL TIMBER MEMBERS ARE TREATED WITH PRESERVATIVES. THE CONTRACTOR SHALL DISPOSE OF TREATED TIMBER ELEMENTS IN ACCORDANCE WITH LOCAL AGENCIES.
3. STEEL COATING TEST RESULTS FROM 2004, PREPARED BY AMERISCI, INDICATE THE PAINT CONTAINS SMALL AMOUNTS OF LEAD; HOWEVER THE CONCENTRATION IS NOT SUFFICIENT TO BE CONSIDERED A LEAD BASED PAINT.

REGISTERED PROFESSIONAL ENGINEER
MATTHEW N. MARTINEZ
No. S3045
EXP. 6/30/2024
STRUCTURAL
STATE OF CALIFORNIA

moffatt & nichol

RECORD DRAWING
REVIEWED BY:
ENGINEER OF RECORD
DATE:

NOTE:
THIS DRAWING MAY BE A REDUCED SCALE PRINT OF THE ORIGINAL DRAWING. UTILIZE GRAPHIC SCALES TO VERIFY IF DRAWING IS A REDUCTION, AND ADJUST SCALES ACCORDINGLY TO THE GRAPHIC SCALES SHOWN.

SPEC NO. 2022-07 WBS NO. EC-0008-01
REFERENCES
PROJECT ENGINEER
CONTRACTOR
CONSTRUCTION STARTED
CONSTRUCTION COMPLETED
COST INSPECTOR

REVISIONS | DATE / APPROVED

PORT of SAN DIEGO
Waterfront of Opportunity

DESIGNED MNM/JKS
DRAWN D. BURROW
CHECKED MNM/JKS

APPROVAL RECOMMENDED
DISTRICT PROJECT MANAGER
APPROVED Chris Brooke 8/10/22
DISTRICT MANAGER–DESIGN

SAN DIEGO, CALIFORNIA
IMPERIAL BEACH PIER ENHANCEMENTS - PHASE 2
GENERAL NOTES, DRAWING INDEX, AND ABBREVIATIONS

DATE JULY 26, 2022
A/E NO. T-002
SHEET 2 OF 30
DRAWING NO. IB-2022-01
REV. -

Aug 09, 2022 - 4:01pm Q:\SD\212326-03 ib pier enhancements phase 2\20 CADD_Active_Design_01 GENERAL_Working\IB-2022-01-GI-SP-02.dwg

NOTES
1. SEE LANDSCAPE ARCHITECT (LA) DRAWINGS FOR CANOPY AND RAILING IMPROVEMENTS
2. SEE ELECTRICAL (E) DRAWINGS FOR LIGHTING IMPROVEMENTS

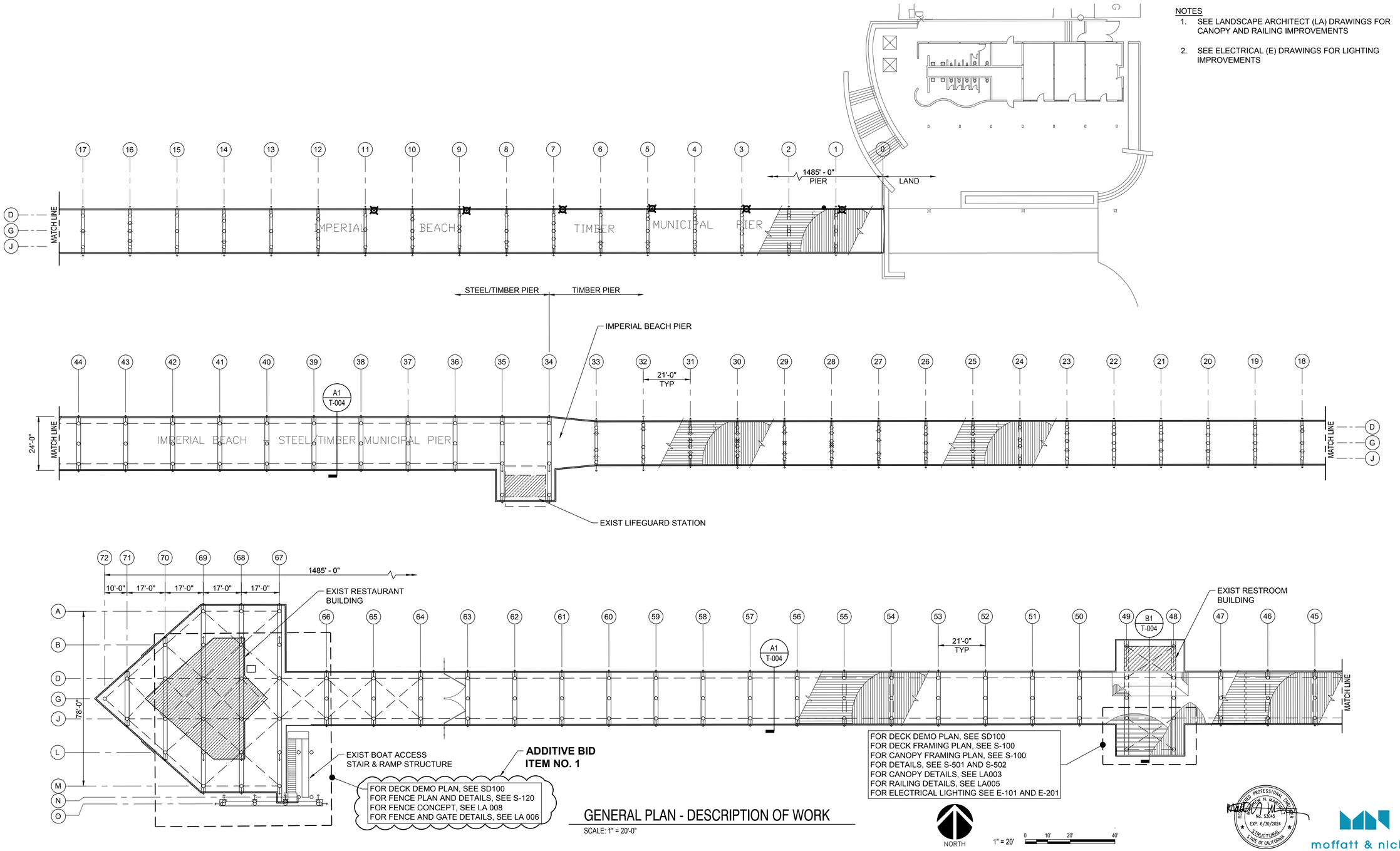

GENERAL PLAN - DESCRIPTION OF WORK

SCALE: 1" = 20'-0"

moffatt & nichol

RECORD DRAWING
REVIEWED BY:
ENGINEER OF RECORD
DATE:

NOTE: THIS DRAWING MAY BE A REDUCED SCALE PRINT OF THE ORIGINAL DRAWING. UTILIZE GRAPHIC SCALES TO VERIFY IF DRAWING IS A REDUCTION, AND ADJUST SCALES ACCORDINGLY TO THE GRAPHIC SCALES SHOWN.

SPEC NO. 2022-07	WBS NO. EC-0008-01
REFERENCES	
PROJECT ENGINEER	
CONTRACTOR	
CONSTRUCTION STARTED	
CONSTRUCTION COMPLETED	
COST	INSPECTOR

REVISIONS | DATE / APPROVED

PORT of SAN DIEGO
Waterfront of Opportunity

DESIGNED MNM/JKS
DRAWN D. BURROW
CHECKED MNM/JKS

APPROVAL RECOMMENDED — DISTRICT PROJECT MANAGER
APPROVED Chris Brooks 8/10/22 — DISTRICT MANAGER–DESIGN

SAN DIEGO, CALIFORNIA

IMPERIAL BEACH PIER ENHANCEMENTS - PHASE 2

GENERAL PLAN - DESCRIPTION OF WORK

DATE JULY 26, 2022
A/E NO. T-003
SHEET 3 OF 30
DRAWING NO. IB-2022-01
REV. -

Aug 09, 2022 - 4:01pm Q:\SD\212326-03 ib pier enhancements phase 2\20 CADD\ Active\ Design\ 01 GENERAL\ Working\IB-2022-01-T003.dwg

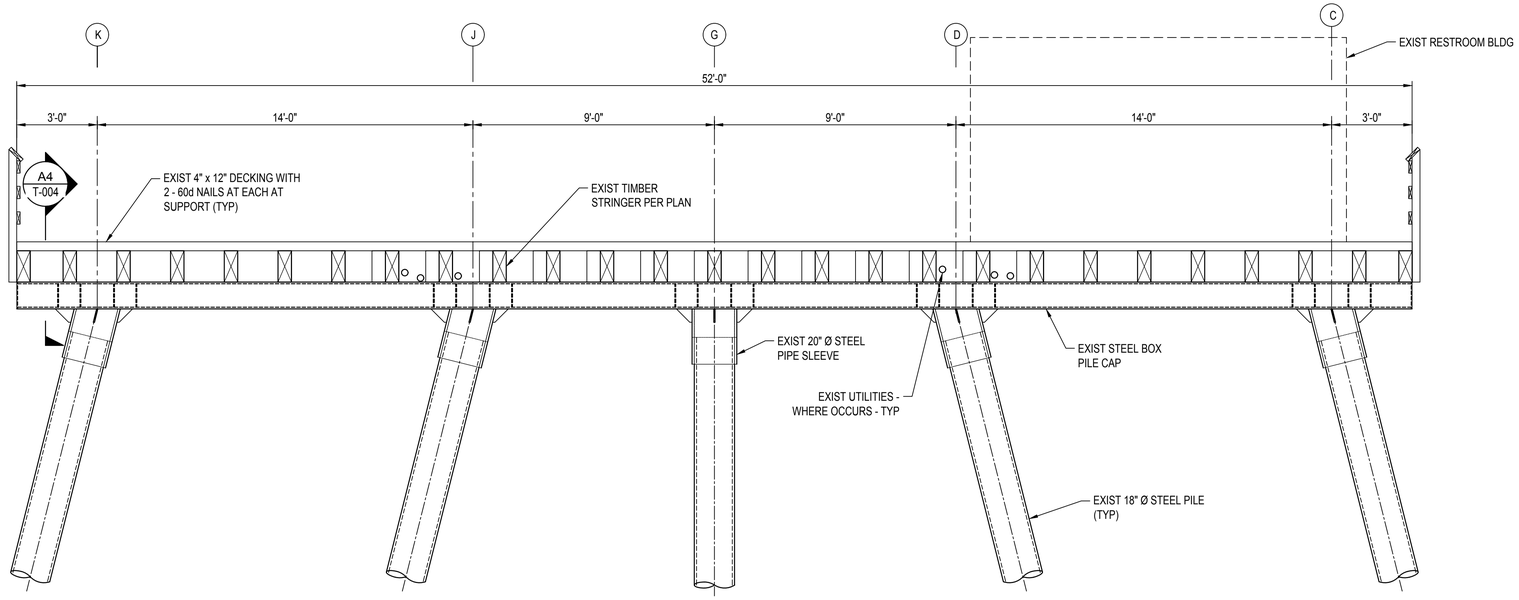

B1 PIER SECTION AT RESTROOM - DECK EXTENSION

SCALE: 3/8" = 1'-0"

3/8" = 1' 0 2' 4' 6'

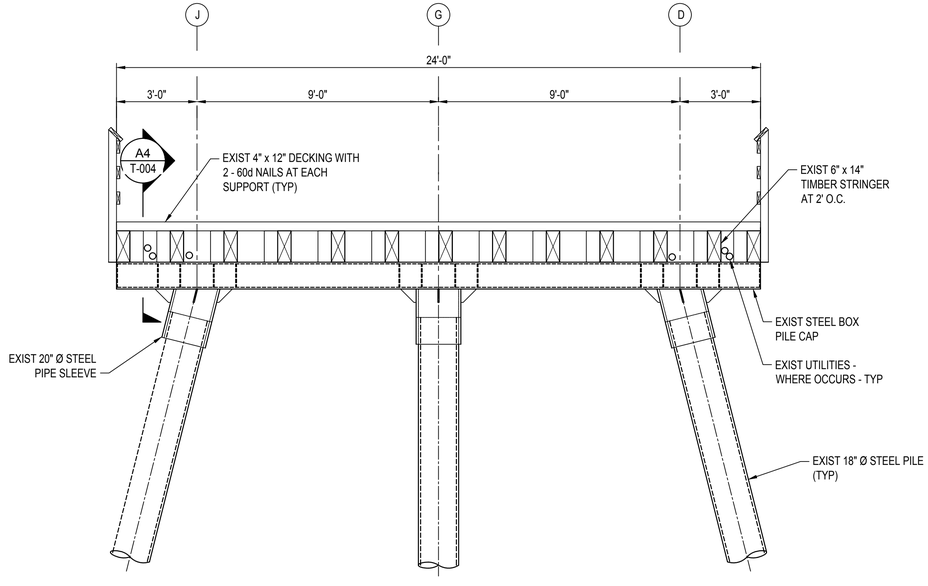

A1 TYP PIER SECTION

SCALE: 3/8" = 1'-0"

3/8" = 1' 0 2' 4' 6'

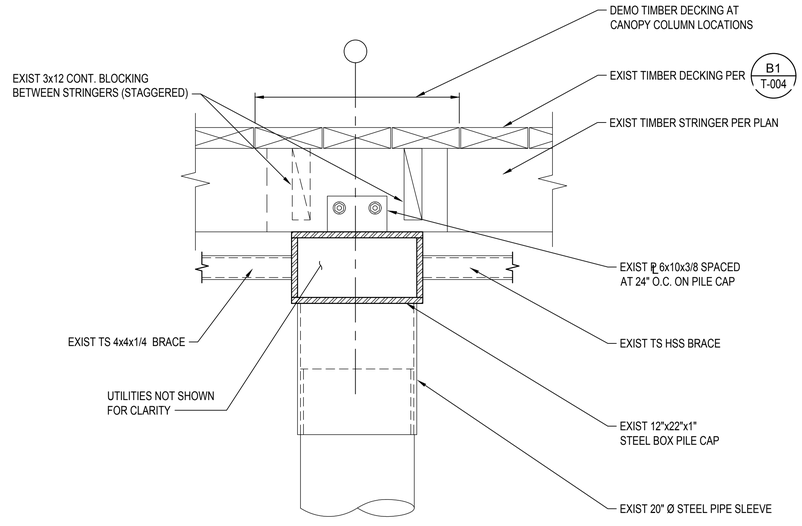

A4 TYP PILE CAP DETAIL

SCALE: 1" = 1'-0"
1" = 1' 0 1' 2'

REGISTERED PROFESSIONAL ENGINEER
JACK N. MARTIN
No. S3045
EXP. 6/30/2024
STRUCTURAL
STATE OF CALIFORNIA

moffatt & nichol

RECORD DRAWING REVIEWED BY: ENGINEER OF RECORD DATE:	NOTE: THIS DRAWING MAY BE A REDUCED SCALE PRINT OF THE ORIGINAL DRAWING. UTILIZE GRAPHIC SCALES TO VERIFY IF DRAWING IS A REDUCTION, AND ADJUST SCALES ACCORDINGLY TO THE GRAPHIC SCALES SHOWN.	SPEC NO. 2022-07 WBS NO. EC-0008-01 REFERENCES PROJECT ENGINEER CONTRACTOR CONSTRUCTION STARTED CONSTRUCTION COMPLETED COST INSPECTOR	REVISIONS	DATE / APPROVED	PORT of SAN DIEGO Waterfront of Opportunity	DESIGNED MNM/JKS DRAWN D. BURROW CHECKED MNM/JKS	APPROVAL RECOMMENDED DISTRICT PROJECT MANAGER APPROVED Chris Brooks 8/10/22 DISTRICT MANAGER-DESIGN	SAN DIEGO, CALIFORNIA IMPERIAL BEACH PIER ENHANCEMENTS - PHASE 2 EXISTING PIER SECTIONS	DATE JULY 26, 2022 A/E NO. T-004 SHEET 4 OF 30 DRAWING NO. IB-2022-01 REV. -

Aug 09, 2022 - 4:01pm Q:\SD\212326-03 ib pier enhancements phase 2\20 CADD_Active_Design_01 GENERAL_Working\IB-2022-01-T004.dwg

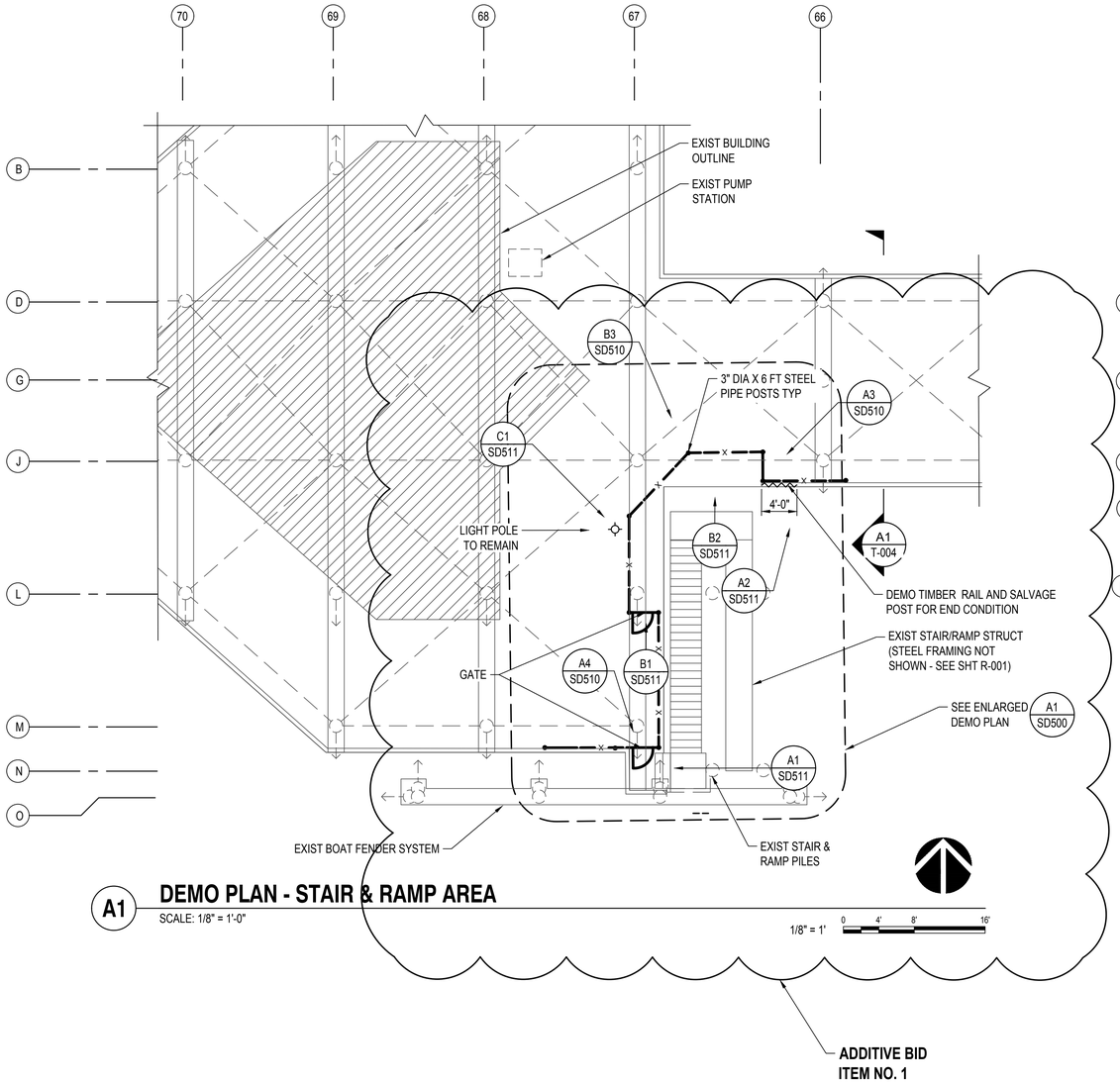

A1 DEMO PLAN - STAIR & RAMP AREA

SCALE: 1/8" = 1'-0"

1/8" = 1' 0 4' 8' 16'

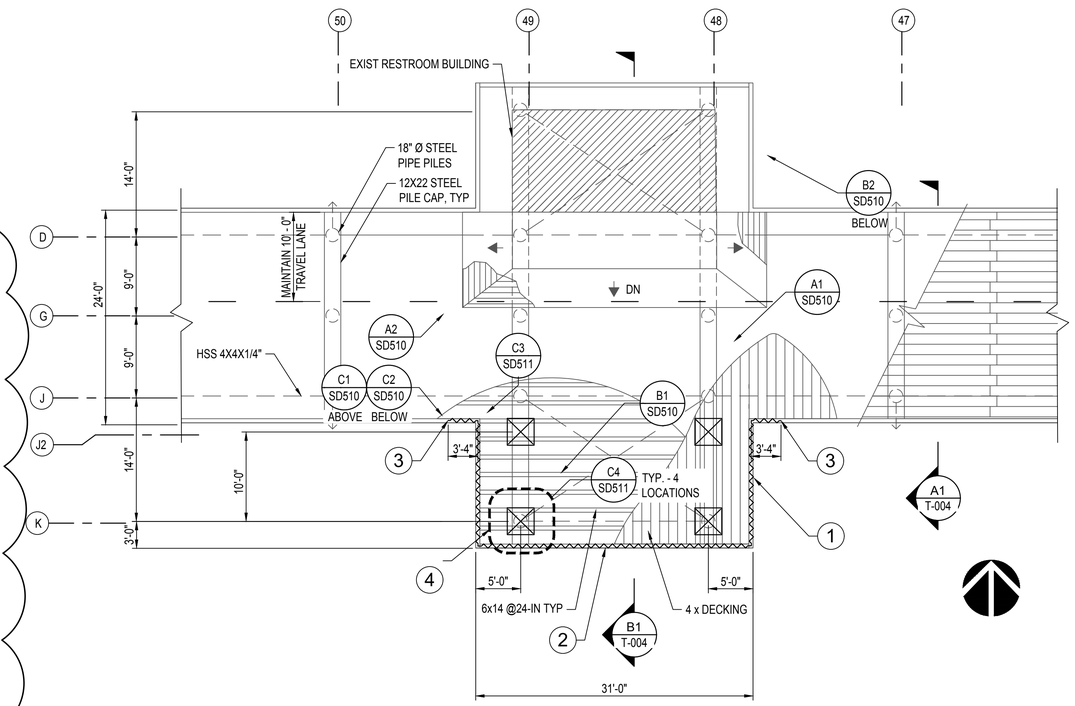

A2 DEMO PLAN - SHADE CANOPY AT PIER EXTENSION

SCALE: 1/8" = 1'-0"

1/8" = 1' 0 4' 8' 16'

KEY PLAN
NOT TO SCALE

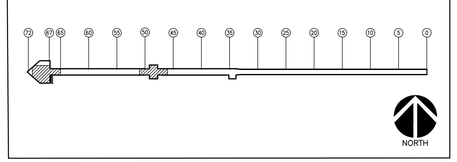

DEMO NOTES:

1. REMOVE EXISTING TIMBER RAILING, SEE B2 / SD500
2. SALVAGE FISHING POLE HOLDERS, WHERE OCCURS
3. SALVAGE TWO (2) POSTS FOR FINAL END CONDITION 2 / LA005
4. REMOVE 2FT SQUARE DECKING AT COLUMN LOCATIONS

REGISTERED PROFESSIONAL ENGINEER — BRIAN N. MAY — No. S3045 — EXP. 6/30/2024 — STRUCTURAL — STATE OF CALIFORNIA

moffatt & nichol

RECORD DRAWING REVIEWED BY: ENGINEER OF RECORD DATE:	NOTE: THIS DRAWING MAY BE A REDUCED SCALE PRINT OF THE ORIGINAL DRAWING. UTILIZE GRAPHIC SCALES TO VERIFY IF DRAWING IS A REDUCTION, AND ADJUST SCALES ACCORDINGLY TO THE GRAPHIC SCALES SHOWN.	SPEC NO. 2022-07 WBS NO. EC-0008-01 REFERENCES PROJECT ENGINEER CONTRACTOR CONSTRUCTION STARTED CONSTRUCTION COMPLETED COST INSPECTOR	REVISIONS / DATE / APPROVED

PORT of SAN DIEGO — Waterfront of Opportunity

DESIGNED MNM/JKS	APPROVAL RECOMMENDED — DISTRICT PROJECT MANAGER	SAN DIEGO, CALIFORNIA
DRAWN D. BURROW	APPROVED Chris Brooks 8/10/22 — DISTRICT MANAGER–DESIGN	IMPERIAL BEACH PIER ENHANCEMENTS - PHASE 2
CHECKED MNM/JKS		DEMOLITION PLANS

DATE	JULY 26, 2022
A/E NO.	SD100
SHEET	5 OF 30
DRAWING NO.	IB-2022-01
REV.	-

Aug 09, 2022 - 4:07pm Q:\SD\212326-03 ib pier enhancements phase 2\20 CADD\ Active\ Design\ 02 STRUCTURAL DEMOLITION\IB-2022-01-SD-DP-03.dwg

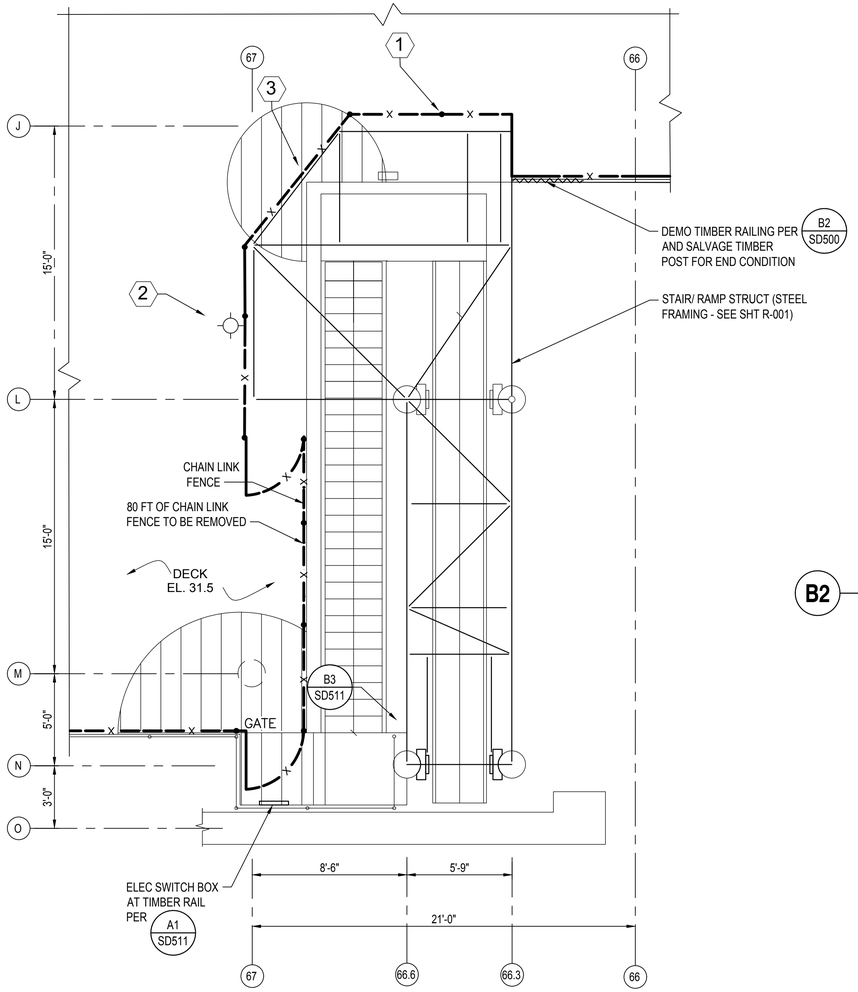

A1 STAIR-RAMP AREA DEMO PLAN

SCALE: 1/4" = 1'-0"

1/4" = 1' 0 2' 4' 8'

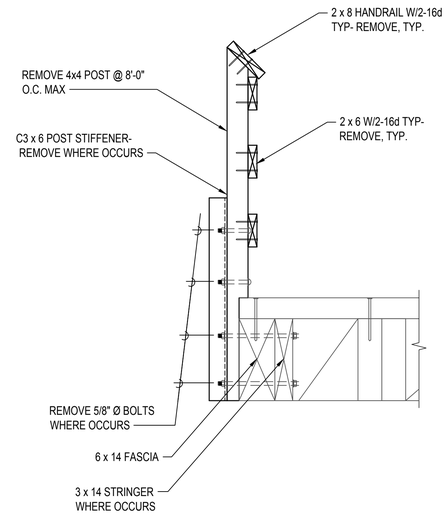

B2 RAILING DEMOLITION DETAIL

SCALE: 1" = 1'-0"

1" = 1' 0 1' 2'

ADDITIVE BID
ITEM NO. 1
ENTIRE SHEET

KEY PLAN
NOT TO SCALE

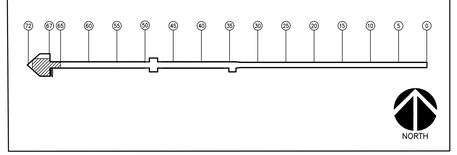

NOTES:

1. REMOVE SECURITY SCREEN CHAIN LINK FENCE AND GATES PER A3/SD510 A4/SD510
2. LIGHT POLE TO REMAIN PER C1/SD511
3. REMOVE POLE FOR STRING LIGHTS. REMOVE AND SALVAGE STRING LIGHTS PER B3/SD510

REGISTERED PROFESSIONAL ENGINEER MARK N. MARCELLO No. S3045 EXP. 6/30/2024 STRUCTURAL STATE OF CALIFORNIA

moffatt & nichol

RECORD DRAWING
REVIEWED BY:
ENGINEER OF RECORD
DATE:

NOTE: THIS DRAWING MAY BE A REDUCED SCALE PRINT OF THE ORIGINAL DRAWING. UTILIZE GRAPHIC SCALES TO VERIFY IF DRAWING IS A REDUCTION, AND ADJUST SCALES ACCORDINGLY TO THE GRAPHIC SCALES SHOWN.

SPEC NO. 2022-07 WBS NO. EC-0008-01
REFERENCES
PROJECT ENGINEER
CONTRACTOR
CONSTRUCTION STARTED
CONSTRUCTION COMPLETED
COST INSPECTOR

REVISIONS | DATE / APPROVED

PORT of SAN DIEGO Waterfront of Opportunity

DESIGNED MNM/JKS
DRAWN D. BURROW
CHECKED MNM/JKS

APPROVAL RECOMMENDED — DISTRICT PROJECT MANAGER
APPROVED Chris Brooks 8/10/22 — DISTRICT MANAGER-DESIGN

SAN DIEGO, CALIFORNIA
IMPERIAL BEACH PIER ENHANCEMENTS - PHASE 2
DEMOLITION DETAILS

DATE JULY 26, 2022
A/E NO. SD500
SHEET 6 OF 30
DRAWING NO. IB-2022-01
REV. -

Aug 09, 2022 - 4:08pm, Q:\SD\212326-03 ib pier enhancements phase 2\20 CADD_Active_Design_02 STRUCTURAL DEMOLITION\IB-2022-01-SD112.dwg

C1 RAILING AT DECK EDGE
SCALE: NTS

C2 UNDERSIDE OF DECK EXTENSION
SCALE: NTS

C3 STEEL FRAME / CABLE HOIST AT STAIR-RAMP STRUCTURE
SCALE: NTS

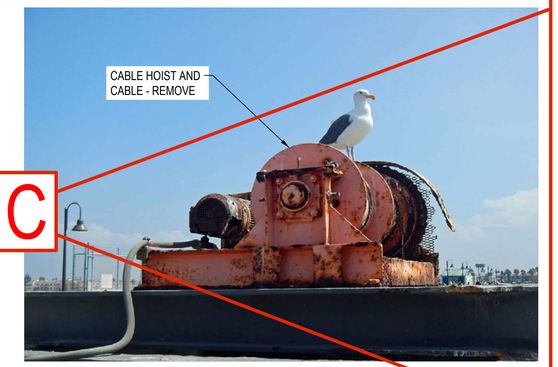

C4 CABLE HOIST AT STEEL FRAME
SCALE: NTS

B1 TIMBER RAIL AND DECK AT EXTENSION
SCALE: NTS

B2 UNDERSIDE OF DECK EXTENSION AT RESTROOM
SCALE: NTS

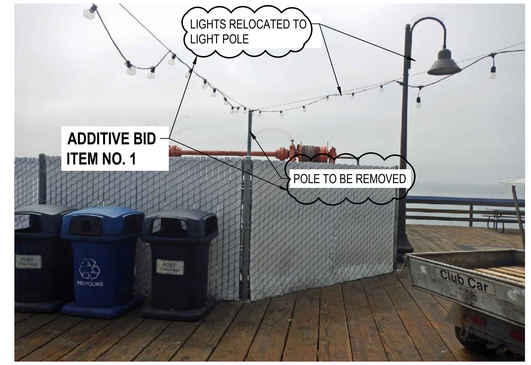

B3 LIGHTING AND FENCE AT STAIR RAMP STRUCTURE
SCALE: NTS

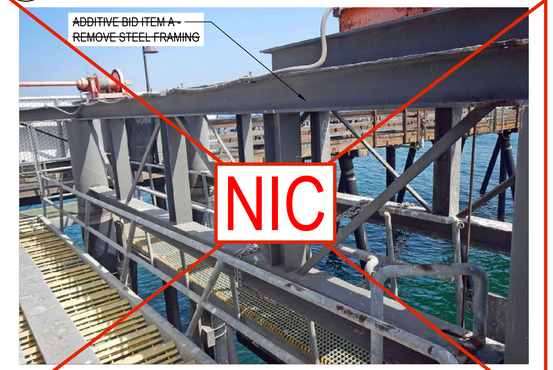

B4 STAIR AND STEEL FRAME
SCALE: NTS

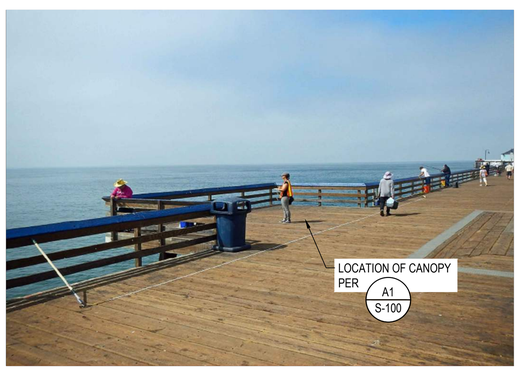

A1 DECK EXTENSION RAILING
SCALE: NTS

A2 ADA RAMP AT RESTROOMS
SCALE: NTS

A3 CHAIN LINK FENCE - SECURITY SCREEN - GATE
SCALE: NTS

A4 CHAIN LINK FENCE - SECURITY SCREEN - GATE
SCALE: NTS

REGISTERED PROFESSIONAL ENGINEER No. S3045 EXP. 6/30/2024 STRUCTURAL STATE OF CALIFORNIA

moffatt & nichol

RECORD DRAWING
REVIEWED BY:
ENGINEER OF RECORD
DATE:

NOTE: THIS DRAWING MAY BE A REDUCED SCALE PRINT OF THE ORIGINAL DRAWING. UTILIZE GRAPHIC SCALES TO VERIFY IF DRAWING IS A REDUCTION, AND ADJUST SCALES ACCORDINGLY TO THE GRAPHIC SCALES SHOWN.

SPEC NO. 2022-07	WBS NO. EC-0008-01	
REFERENCES		
PROJECT ENGINEER		
CONTRACTOR		
CONSTRUCTION STARTED		
CONSTRUCTION COMPLETED		
COST	INSPECTOR	

REVISIONS | DATE / APPROVED

PORT of SAN DIEGO
Waterfront of Opportunity

DESIGNED MNM/JKS
DRAWN D. BURROW
CHECKED MNM/JKS

APPROVAL RECOMMENDED
DISTRICT PROJECT MANAGER
APPROVED Chris Brooks 8/10/22
DISTRICT MANAGER-DESIGN

SAN DIEGO, CALIFORNIA
IMPERIAL BEACH PIER ENHANCEMENTS - PHASE 2
DEMOLITION PHOTOGRAPHS

DATE JULY 26, 2022
A/E NO. SD510
SHEET 7 OF 30
DRAWING NO. IB-2022-01
REV. -

Aug 09, 2022 - 4:08pm Q:\SD\212326-03 ib pier enhancements phase 2\20 CADD\ Active\ Design\ 02 STRUCTURAL DEMOLITION\IB-2022-01-SD501.dwg

C1 LIGHT POLE AT CHAIN LINK FENCE
SCALE: NTS

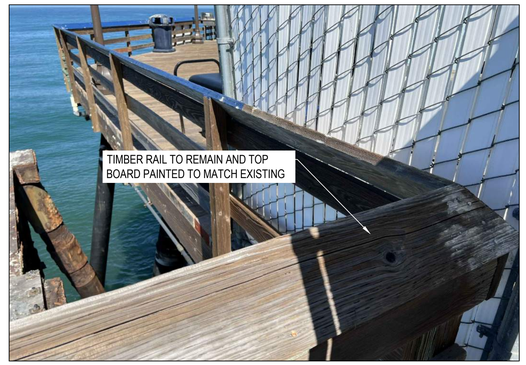

C2 RAILING BEHIND CHAIN LINK FENCE
SCALE: NTS

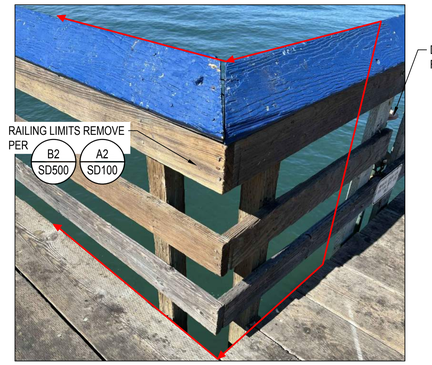

C3 RAILING CORNER AT EXTENSION
SCALE: NTS

NOTES:

1. CAREFULLY SAWCUT TIMBER DECKING BETWEEN 60d SPIKES
2. INSTALL 3x14 TIMBER BOARDS
3. SALVAGE TIMBER DECKING FOR REPLACEMENT TO BE PLACED AROUND CANOPY COLUMN AND NAILED TO 3x14 BOARDS

FOR ITEMS SHOWN BUT NOT NOTED SEE A4 / T-004

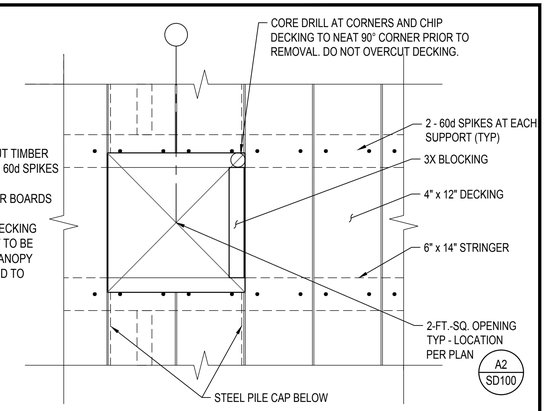

C4 DECK DEMOLITION AT CANOPY PIPE COLUMN
SCALE: 1" = 1' 0"

1" = 1' 0 1' 2'

NIC

B1 ELECTRICAL PANEL AT STAIR RAMP STRUCTURE
SCALE: NTS

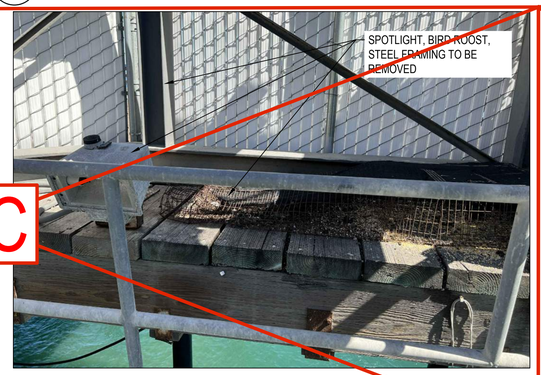

B2 SPOTLIGHT AND BIRD ROOST
SCALE: NTS

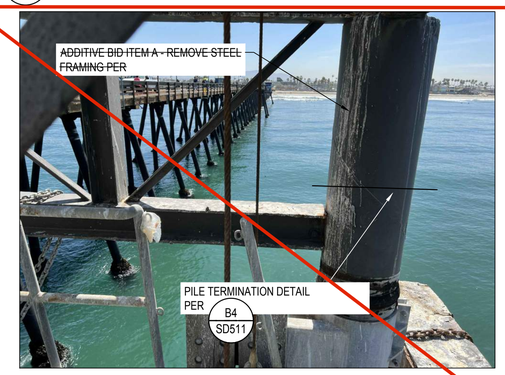

B3 PILE AT STAIR RAMP STRUCTURE
SCALE: NTS

~~ADDITIVE BID SCHEDULE A~~

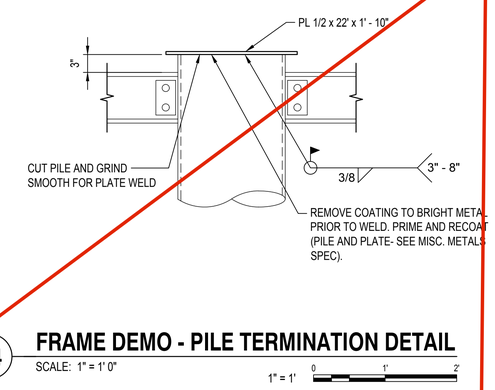

B4 FRAME DEMO - PILE TERMINATION DETAIL
SCALE: 1" = 1' 0"

1" = 1' 0 1' 2'

A1 LANDING AND ELECTRICAL PANEL AT STAIR/RAMP STRUCTURE
SCALE: NTS

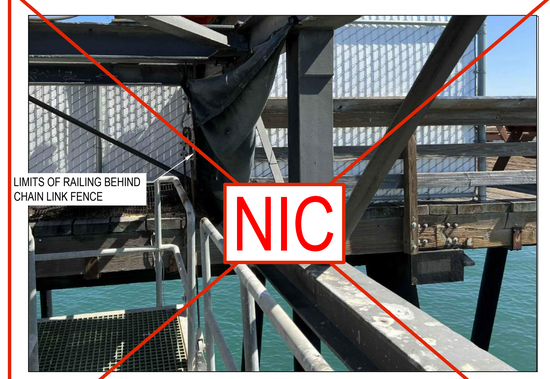

A2 RAILING BEHIND CHAIN LINK FENCE
SCALE: NTS

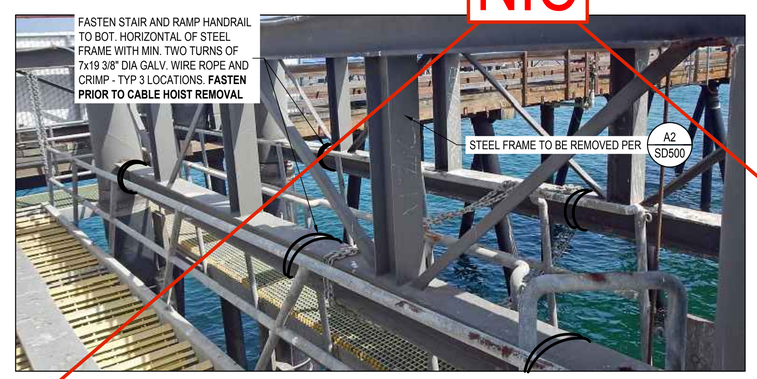

A3 STAIR RAMP FASTENING DETAIL
SCALE: NTS

REGISTERED PROFESSIONAL ENGINEER — MARK A. WEAVER — No. 53545 — EXP. 6/30/2024 — STRUCTURAL — STATE OF CALIFORNIA

moffatt & nichol

RECORD DRAWING REVIEWED BY: ENGINEER OF RECORD DATE:	NOTE: THIS DRAWING MAY BE A REDUCED SCALE PRINT OF THE ORIGINAL DRAWING. UTILIZE GRAPHIC SCALES TO VERIFY IF DRAWING IS A REDUCTION, AND ADJUST SCALES ACCORDINGLY TO THE GRAPHIC SCALES SHOWN.	SPEC NO. 2022-07 WBS NO. EC-0008-01 REFERENCES PROJECT ENGINEER CONTRACTOR CONSTRUCTION STARTED CONSTRUCTION COMPLETED COST INSPECTOR	REVISIONS	DATE / APPROVED	PORT of SAN DIEGO Waterfront of Opportunity

DESIGNED MNM/JKS	APPROVAL RECOMMENDED DISTRICT PROJECT MANAGER	SAN DIEGO, CALIFORNIA	DATE JULY 26, 2022
DRAWN D. BURROW	APPROVED Chris Brooks 8/10/22 DISTRICT MANAGER–DESIGN	IMPERIAL BEACH PIER ENHANCEMENTS - PHASE 2	A/E NO. SD511
CHECKED MNM/JKS			SHEET 8 OF 30
		DEMOLITION PHOTOGRAPHS AND DETAILS	DRAWING NO. IB-2022-01 REV. -

Aug 09, 2022 - 4:08pm Q:\SD\212326-03 Ib pier enhancements phase 2\20 CADD\ Active\ Design\ 02 STRUCTURAL DEMOLITION\IB-2022-01-SD511.dwg

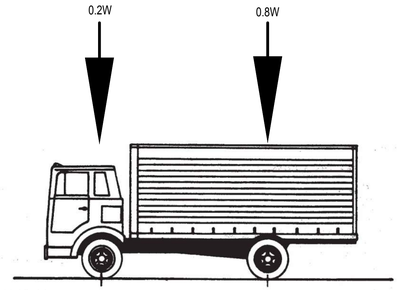

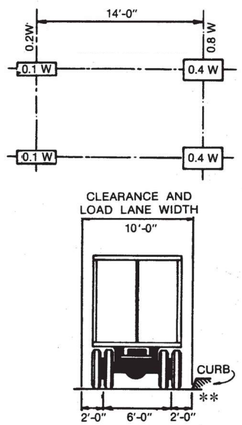

FIGURE 3.7.6A Standard H Trucks

STANDARD H10-44 TRUCK

W = GROSS WEIGHT OF A TWO AXLE TRUCK PER NOTE E-1.

A1 HS10-44 TRUCK LOADING DIAGRAM

SCALE: NTS

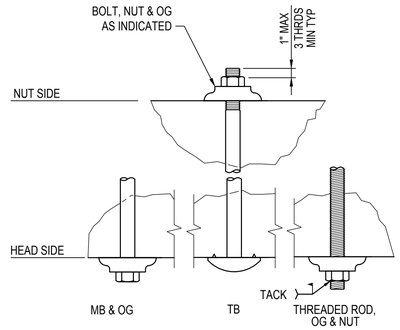

A2 TIMBER BOLTING DETAIL

SCALE: NTS

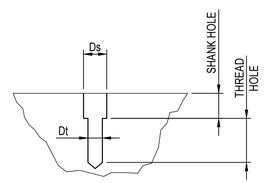

DIAMETER OF LEAD HOLE (IN.)		
NOM DIA D	SHANK Ds	THREADED PORTION Dt
3/8	*N/A	*N/A
1/2	1/2	15/64
5/8	5/8	5/16
3/4	3/4	13/32
7/8	7/8	33/64
1	1	5/8
1 1/8	1 1/8	3/4
1 1/4	1 1/4	7/8

NOTE:
VALUES PER AITC TAB 6.23 GROUPS III & IV SPECIES
* PROVIDE LEAD HOLE IF SPLITTING OCCURS

A3 LAG SCREW (LS) LEAD HOLE DETAIL

SCALE: NTS

A. GENERAL NOTES

1. ALL WORK SHALL BE DONE IN ACCORDANCE WITH THESE PLANS, THE CONTRACT SPECIFICATIONS, AND THE LATEST EDITION OF THE STANDARD SPECIFICATIONS FOR PUBLIC WORKS CONSTRUCTION.
2. THE CONTRACTOR SHALL DESIGN, CONSTRUCT, AND MAINTAIN ALL SAFETY DEVICES INCLUDING SCAFFOLDING AND TEMPORARY HANDRAILS AND BE RESPONSIBLE FOR CONFORMING TO ALL LOCAL, STATE AND FEDERAL SAFETY HEALTH STANDARDS, LAWS AND REGULATIONS.
3. BEFORE FABRICATION AND INSTALLATION, THE CONTRACTOR SHALL FIELD VERIFY THE EXACT LOCATION, SIZE, AND LENGTH OF ALL STRUCTURAL FRAMING, UTILITIES AND HARDWARE.
4. THE CONTRACTOR SHALL FIELD VERIFY THE EXACT LOCATION AND EXTENT OF ALL REPAIR WORK PRIOR TO ORDERING MATERIALS AND FABRICATION OF RELATED ELEMENTS OF CONSTRUCTION.

B. STRUCTURAL STEEL & MISC METAL

1. SQUARE, RECTANGULAR AND ROUND HOLLOW STRUCTURAL SHAPES SHALL CONFORM TO ASTM A500 Gr. B.
2. STRUCTURAL STEEL SHALL CONFORM TO ASTM A36 FOR MISC ANGLES, CHANNELS AND PLATES.
3. THREADED RODS SHALL CONFORM TO ASTM A36.
4. BOLTS SHALL CONFORM TO ASTM A307.
5. NUTS SHALL BE ASTM A563 HEX OR HEAVY HEX.
6. WASHERS SHALL BE ASTM F436 UNDER ALL BOLT HEADS AND NUTS UNO.
7. INDUSTRIAL HOT-DIP GALVANIZE AFTER FABRICATION: ALL FRAMES, PLATES, BOLTS, NUTS, WASHERS, CHAINS, NAILS, SCREWS AND RELATED ITEMS, UNO.
8. ALL WELDING SHALL BE DONE BY SHIELDING ARC PROCESS USING APPROVED ELECTRODES PER AWS D.1 E70XX (LOW HYDROGEN ELECTRODES).
9. MATERIALS AND WORKMANSHIP SHALL CONFORM TO THE LATEST EDITION OF THE AISC SPECIFICATION FOR STRUCTURAL STEEL BUILDINGS.
10. ARCHITECTURALLY EXPOSED STRUCTURAL STEEL (AESS - SEE SPECIFICATIONS). PROVISIONS OF AISC AESS APPLY AS FOLLOWS:
    A. CANOPY COLUMNS SHALL CONFORM TO THE REQUIREMENTS OF AESS 3: "FEATURE ELEMENTS IN CLOSE VIEW."
    B. CANOPY FRAMING SHALL CONFORM TO THE REQUIREMENTS OF AESS 2: "FEATURE ELEMENTS NOT IN CLOSE VIEW."
    C. ERECTION TOLERANCES ARE 50% MORE STRINGENT FOR AESS THAN CONVENTIONAL STEEL CONSTRUCTION.

C. STEEL COATINGS

1. PREPARATION OF STRUCTURAL STEEL SHALL BE IN ACCORDANCE WITH SSPC: SP1, SP3, & SP10.
2. COATING OF STRUCTURAL STEEL SHALL CONFORM TO SSPC PS11.01.

D. TIMBER

1. FRAMING MEMBERS SHALL BE DOUGLAS FIR No. 1 GRADE, UNO
2. HOLES FOR BOLTS SHALL BE BORED WITH A 1/32" TO 1/16" LARGER THAN BOLTS.
3. PRIOR TO COMPLETION OF BOLTED CONNECTIONS TO TIMBER, RETIGHTEN AND LOCK ALL BOLTS IN PLACE BY MARRING THE BOLT THREADS OUTSIDE OF THE NUT.
4. ALL BOLTS DIRECTLY CONNECTED TO WOOD SHALL BE EQUIPPED WITH WASHERS; DOME HEAD "TIMBER BOLTS" DO NOT REQUIRE A WASHER UNDER THE BOLT HEAD.
5. ALL BOLTS, LAG SCREWS AND SPIKES SHALL HAVE PREDRILLED PILOT HOLES PRIOR TO INSTALLATION. PER A3/S-100
6. DO NOT NOTCH POSTS, STRINGERS OR PILE CAPS EXCEPT WHERE SHOWN IN DETAILS.
7. ALL WOOD SHALL BE TREATED WITH 0.6 PCF ACZA. IN ACCORDANCE WITH AWPA P5, P22 & U1.
8. ALL NAILS SHALL BE GALV DEFORMED SHANK COMMON WIRE NAIL AND CONFORM TO FEDERAL SPECIFICATION FF-N-105B, SIZE AND SPACING SHALL BE AS DETAILED OR NOTED ON THE DRAWINGS.
9. SPIKES SHALL CONFORM TO FEDERAL SPECIFICATION FF-N-105B.
10. ANY CUT SURFACES OR DRILLED HOLES MADE IN THE PRESERVATIVE-TREATED WOOD SHALL RECEIVE A TWO-COAT APPLICATION OF PRESERVATIVE AFTER CUTTING OR DRILLING.
11. LUMBER SIZES INDICATED ARE NOMINAL. WHERE LUMBER IS REQUIRED TO MATCH EXISTING CONSTRUCTION. THE CONTRACTOR SHALL FIELD VERIFY THE DIMENSIONAL REQUIREMENTS OF THE TIMBER.

E. ALLOWABLE PIER CONSTRUCTION LOADING

1. PIER LOADS ARE RESTRICTED TO THE FOLLOWING LIVE LOADS:
   UNIFORM LL=100 PSF
   TRUCK LOAD =H10-44, 20,000 LB TOTAL
   (4,000 LB FRONT AXLE AND 16,000 LB REAR AXLE) SEE DETAIL A1/S-001
2. CONSTRUCTION EQUIPMENT ARE RESTRICTED TO THE FOLLOWING:
   WHEN TRAVELING: H10-44.
   WHEN LIFTING: 15,000 LBS OUTRIGGER OR WHEEL LOAD, APPLIED TO AN AREA 4'x4' CENTERED OVER A PILECAP.
3. WITH THE USE OF SPREADER BEAMS AND CRANE MATS, THE MAXIMUM CRAWLER CRANE SIZE IS 12.5 TON.
4. FOR THE TIMBER PILE PORTION OF THE PIER, THE SPREADER BEAMS SHALL BE POSITIONED DIRECTLY OVER THE PILES.

REGISTERED PROFESSIONAL ENGINEER
JESSE N. MARQUEZ
No. 53545
EXP. 6/30/2024
STRUCTURAL
STATE OF CALIFORNIA

moffatt & nichol

RECORD DRAWING
REVIEWED BY:
ENGINEER OF RECORD
DATE:

NOTE:
THIS DRAWING MAY BE A REDUCED SCALE PRINT OF THE ORIGINAL DRAWING. UTILIZE GRAPHIC SCALES TO VERIFY IF DRAWING IS A REDUCTION, AND ADJUST SCALES ACCORDINGLY TO THE GRAPHIC SCALES SHOWN.

SPEC NO. 2022-07 WBS NO. EC-0008-01
REFERENCES
PROJECT ENGINEER
CONTRACTOR
CONSTRUCTION STARTED
CONSTRUCTION COMPLETED
COST INSPECTOR

REVISIONS | DATE / APPROVED

PORT of SAN DIEGO
Waterfront of Opportunity

DESIGNED MNM/JKS
DRAWN D. BURROW
CHECKED MNM/JKS

APPROVAL RECOMMENDED
DISTRICT PROJECT MANAGER
APPROVED Chris Brooks 8/10/22
DISTRICT MANAGER-DESIGN

SAN DIEGO, CALIFORNIA
IMPERIAL BEACH PIER
ENHANCEMENTS - PHASE 2
GENERAL STRUCTURAL NOTES

DATE JULY 26, 2022
A/E NO. S-001
SHEET 9 OF 30
DRAWING NO. IB-2022-01
REV. -

Aug 09, 2022 - 5:19pm Q:\SD\212326-03 ib pier enhancements phase 2\20 CADD\ Active\ Design\ 03 STRUCTURAL\IB-2022-01-S-100.dwg

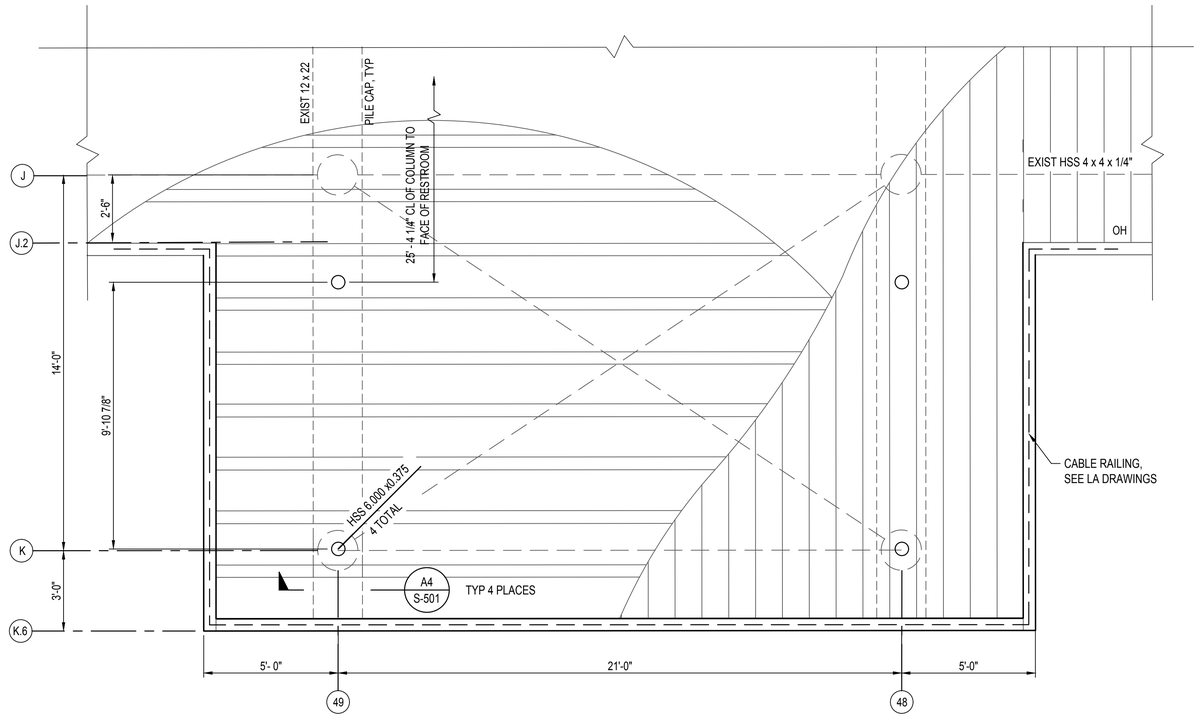

A1 ENLARGED DECK PLAN BELOW CANOPY

SCALE: 3/8"=1'-0"

3/8" = 1' 0 2' 4' 6'

NORTH

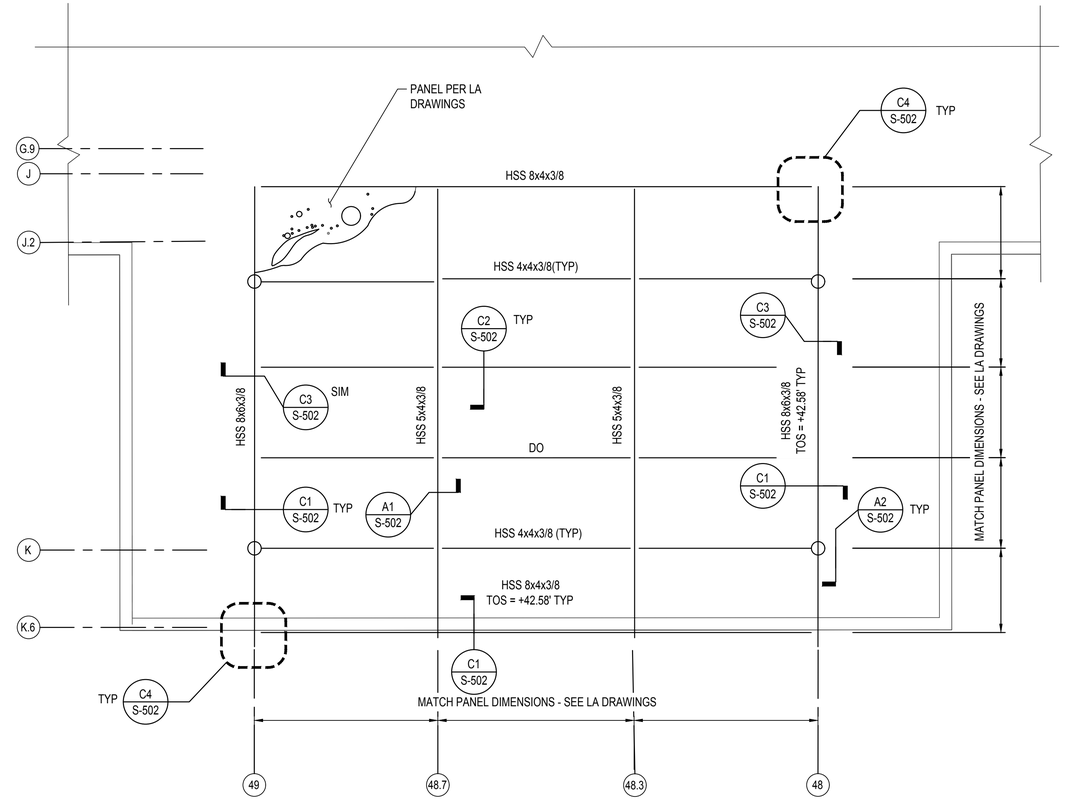

A2 PARTIAL ENLARGED PLAN AT CANOPY

SCALE: 3/8" = 1'-0"

3/8" = 1' 0 2' 4' 6'

NORTH

KEY PLAN

NOT TO SCALE

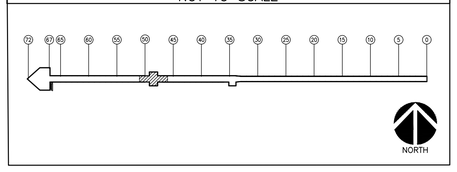

REGISTERED PROFESSIONAL ENGINEER
No. 53045
EXP. 6/30/2024
STRUCTURAL
STATE OF CALIFORNIA

moffatt & nichol

RECORD DRAWING REVIEWED BY: ENGINEER OF RECORD DATE:	NOTE: THIS DRAWING MAY BE A REDUCED SCALE PRINT OF THE ORIGINAL DRAWING. UTILIZE GRAPHIC SCALES TO VERIFY IF DRAWING IS A REDUCTION, AND ADJUST SCALES ACCORDINGLY TO THE GRAPHIC SCALES SHOWN.	SPEC NO. 2022-07 WBS NO. EC-0008-01 REFERENCES PROJECT ENGINEER CONTRACTOR CONSTRUCTION STARTED CONSTRUCTION COMPLETED COST INSPECTOR	REVISIONS	DATE / APPROVED	PORT of SAN DIEGO Waterfront of Opportunity	DESIGNED MNM/JKS DRAWN D. BURROW CHECKED MNM/JKS	APPROVAL RECOMMENDED DISTRICT PROJECT MANAGER APPROVED Chris Brooke 8/10/22 DISTRICT MANAGER-DESIGN	SAN DIEGO, CALIFORNIA IMPERIAL BEACH PIER ENHANCEMENTS - PHASE 2 DECK LEVEL AND CANOPY LEVEL PLANS

DATE	JULY 26, 2022
A/E NO.	S-100
SHEET	10 OF 30
DRAWING NO.	IB-2022-01
REV.	-

Aug 09, 2022 - 5:19pm Q:\SD\212326-03 ib pier enhancements phase 2\20 CADD\ Active\ Design\ 03 STRUCTURAL\IB-2022-01-S-101.dwg

NOTES:

1. INSTALL SALVAGED TIMBER RAIL POST AT END CONDITION
2. INSTALL 6FT TALL CABLE FENCE POSTS AT SPECIFIED LOCATIONS IN POST SCHEDULE
3. TIGHTEN CABLES PER MANUFACTURER
4. INSTALL 6FT TALL GATES (2)
5. INSTALL SALVAGED STRING LIGHTS (AUGMENT WITH ADDITIONAL BOX/SET OF SIMILAR LIGHTS TO PROVIDE SUFFICIENT LENGTH TO MAKE CONNECTION)

POST SCHEDULE NOTES:

1. ALL POSTS ARE 6 1/2"x 6 1/2"x1/2" SS TEE UNO
2. ALL PLATES ARE 1/4" THICK UNO
3. ALL 5/8" LAG SCREWS UNO
   1. 3" LENGTH LAG SCREWS INTO DECKING
   2. 6" LENGTH LAG SCREWS INTO STRINGERS
4. ALL 1/4" FILLET WELDS
5. DECKING BOARDS ARE 4x12
6. STRINGERS ARE 6 x14
7. CL LAG SCREWS TO EDGE OF PLATE IS 1" TYP
8. CL LAG SCREWS TO EDGE OF PIER IS 2 1/2"

SEE LA SHEETS FOR FENCE, GATES, AND CABLE DETAILS.

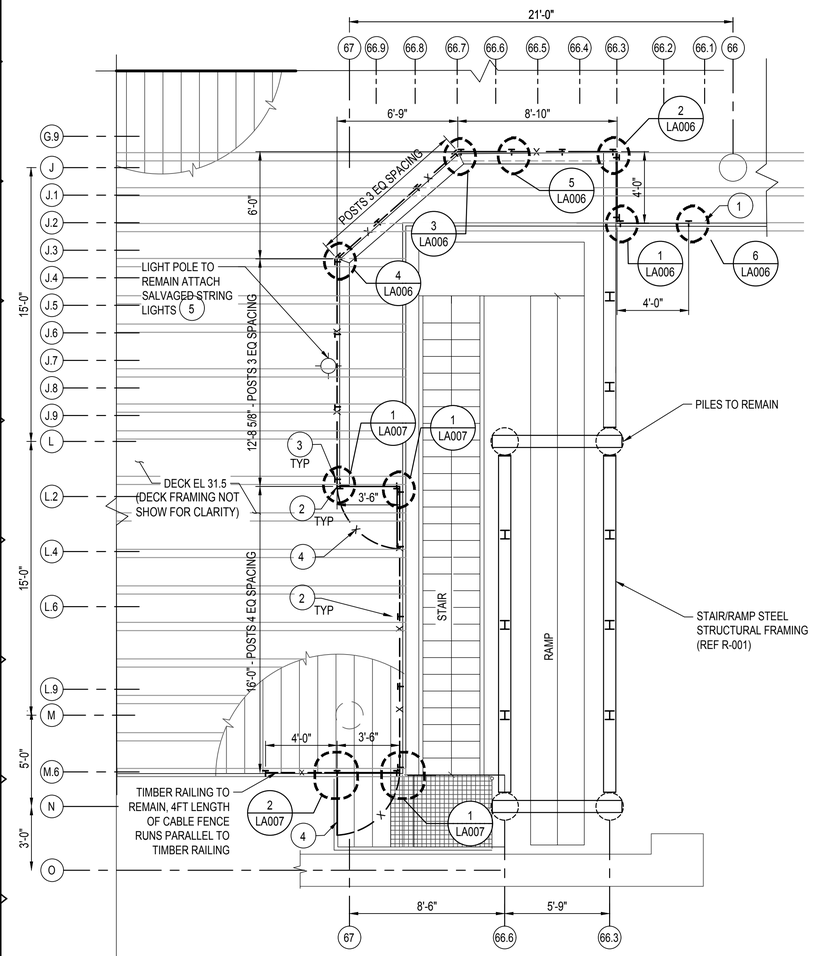

A1 ENLARGED STAIR & RAMP FENCING PLAN

SCALE: 1/4" = 1'-0"

1/4" = 1' 0 2' 4' 8'

POST SCHEDULE

POST GRID	STRUCTURAL CONFIGURATION PLAN	FENCE POST SECTION	COMMENT
66.1 / J.2	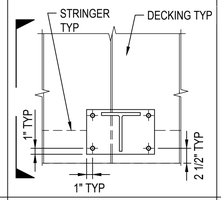	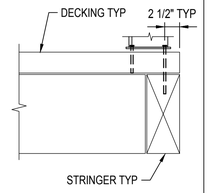	NORTH END POST CONDITION AT EDGE OF DECK
66.3 / J.2	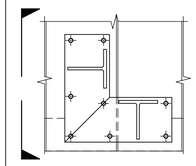	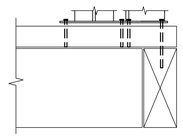	INSIDE CORNER END POSTS AT EDGE OF DECK
66.3 / G.9	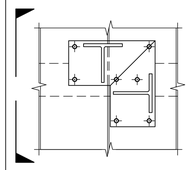	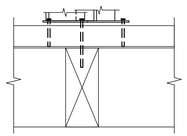	OUTSIDE CORNER END POSTS INSIDE DECK (AWAY FROM EDGE)
66.45 / G.9 66.58 / G.9	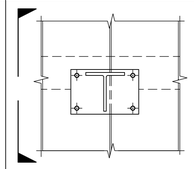	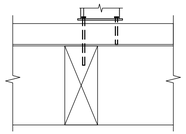	MIDDLE POSTS INSIDE DECK (AWAY FROM EDGE)
66.7 / G.9	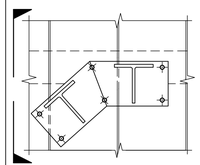	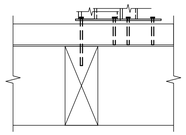	CORNER BEND END POSTS INSIDE DECK (AWAY FROM EDGE)
66.8 / J.1 66.9 / J.2	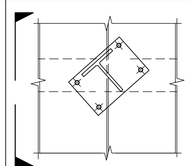	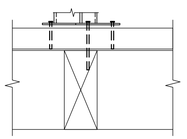	MIDDLE POSTS INSIDE DECK (AWAY FROM EDGE)
67.0 / J.3	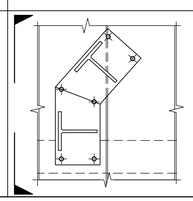	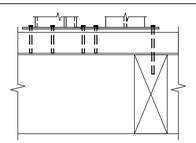	CORNER BEND END POSTS INSIDE DECK (AWAY FROM EDGE)

POST GRID	STRUCTURAL CONFIGURATION PLAN	FENCE POST SECTION	COMMENT
67.0 / J.6 67.0 / J.9	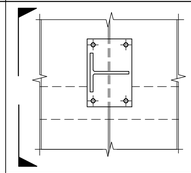	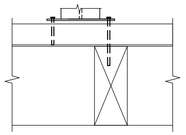	MIDDLE POSTS INSIDE DECK (AWAY FROM EDGE)
67.0 / L.2	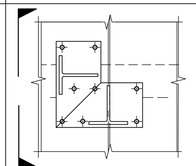	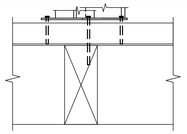	OUTSIDE CORNER END POSTS (AWAY FROM EDGE) - GATE LOCATION
66.85 / L2	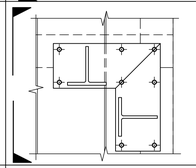	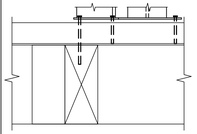	INSIDE CORNER END POSTS AT EDGE - GATE LOCATION
66.85 / L.4 66.85 / L.6 66.85 / L.9	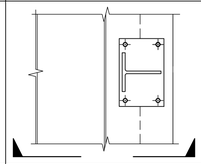	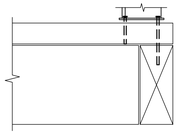	MIDDLE POSTS AT EDGE OF DECK
66.85 / M.6	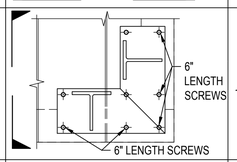	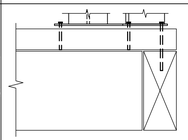	INSIDE CORNER END POSTS AT EDGE - GATE LOCATION
67.0 / M.6 67.3 / M.6 SIM	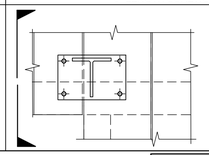	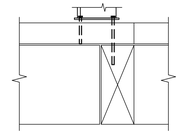	FENCE POST AT SOUTH GATE

KEY PLAN
NOT TO SCALE

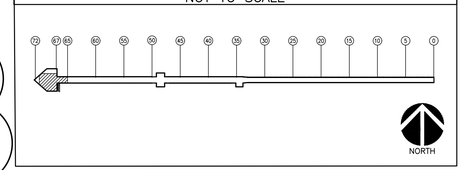

ADDITIVE BID ITEM NO. 1 ENTIRE SHEET

REGISTERED PROFESSIONAL ENGINEER MARK NICHOL No. S3045 EXP. 6/30/2024 STRUCTURAL STATE OF CALIFORNIA

moffatt & nichol

RECORD DRAWING
REVIEWED BY:
ENGINEER OF RECORD
DATE:

NOTE: THIS DRAWING MAY BE A REDUCED SCALE PRINT OF THE ORIGINAL DRAWING. UTILIZE GRAPHIC SCALES TO VERIFY IF DRAWING IS A REDUCTION, AND ADJUST SCALES ACCORDINGLY TO THE GRAPHIC SCALES SHOWN.

DESIGN NO. 2022-07 WBS NO. EC-0008-01
REFERENCES
PROJECT ENGINEER
CONTRACTOR
CONSTRUCTION STARTED
CONSTRUCTION COMPLETED
COST INSPECTOR
REVISIONS
DATE / APPROVED

PORT of SAN DIEGO Waterfront of Opportunity

DESIGNED MNM/JKS
DRAWN D. BURROW
CHECKED MNM/JKS
APPROVAL RECOMMENDED — DISTRICT PROJECT MANAGER
APPROVED Chris Brooks 8/10/22 DISTRICT MANAGER–DESIGN

SAN DIEGO, CALIFORNIA
IMPERIAL BEACH PIER ENHANCEMENTS - PHASE 2
FENCE PLAN AND DETAIL

DATE JULY 26, 2022
A/E NO. S-120
SHEET 11 OF 30
DRAWING NO. IB-2022-01
REV. -

Aug 10, 2022 - 12:39p D:\SD\212370\3 Ile enhancements_dgn\C-120 CADD\Acad\Design\01_PRELIMINAL DEMO\C-200 - 2022-01-SD\01.dwg

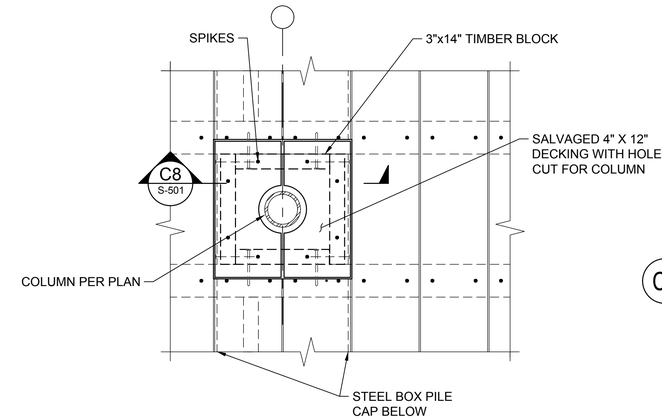

C4 REPLACED DECKING AT CANOPY PIPE COLUMN
SCALE: 1" = 1'-0"
1" = 1' 0 1' 2'

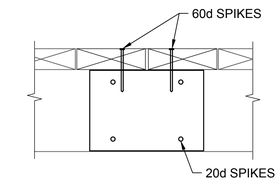

C8 SECTION
SCALE: 1" = 1'-0"
1" = 1' 0 1' 2'

NOTES:

1. INSTALL 3"x14" TIMBER BOARDS
2. INSTALL SALVAGED DECKING ROUND CANOPY COLUMN AND NAIL TO 3" x 14" BOARDS

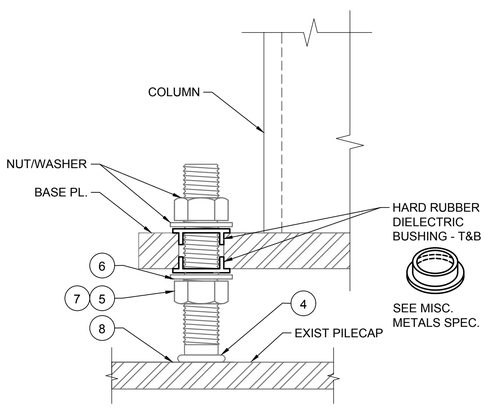

A1 DIELECTRIC BUSHING AT LEVELING NUT
SCALE: 6" = 1'-0"
6" = 1' 0 3" 6" 9" 12"

NOTES:

1. REMOVE DECKING - SEE DETAIL
2. REMOVE BLOCKING
3. REMOVE 12' - SQ. AREA OF COATING ON TOP OF PILECAP TO SSPC-SP3 POWER TOOL CLEANING
4. STUD GUN WELD 3/4" DIA x 4 1/2" NELSON CPL THREADED STUDS TO PILECAP IMMEDIATELY AFTER C LEANING
5. PLACE BOTTOM LEVELING NUTS - ALLOW 1" CLR THREADED STUD.
6. APPLY SPRAY GALVANIZING COMPOUND TO RAW METAL SURFACES AND STUDS BENEATH LEVELING NUT.
7. USE LEVELING NUTS TO ADJUST COLUMN TO PLUMB VERT.
8. RECOAT PILECAP AND EXPOSED PORTION OF WELDED STUD BELOW NUT PER MISC. METALS SPEC
9. PLACE WASHER, LOWER BUSHING, COLUMN/BASE PL ASSEMBLY, UPPER BUSHING, WASHER, AND NUT
10. REPLACE DECKING PER C4 / S-501
11. PLACE COL. ESCUTCHEON COLLAR PER LA DRAWINGS

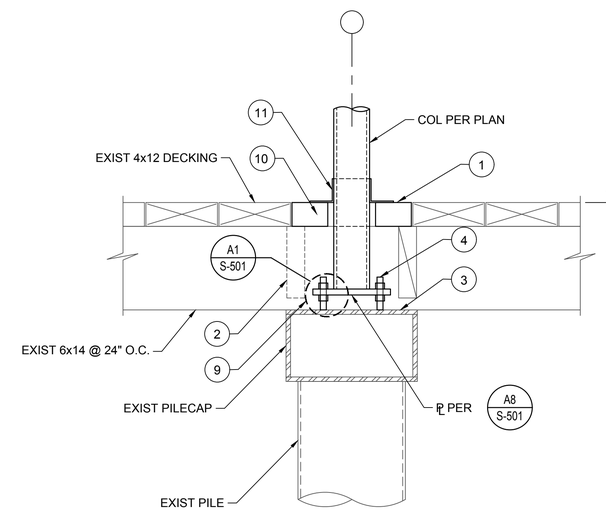

A4 TYP CANOPY COLUMN - PIER DECK CONNECTION
SCALE: 1" = 1'-0"
1" = 1' 0 1' 2'

A8 BASE PLATE
SCALE: 1 1/2" = 1'-0"
1 1/2" = 1' 0 6" 1' 2'

REGISTERED PROFESSIONAL ENGINEER MICHAEL N. MARCHESI No. S3045 EXP. 6/30/2024 STRUCTURAL STATE OF CALIFORNIA

moffatt & nichol

RECORD DRAWING
REVIEWED BY:
ENGINEER OF RECORD
DATE:

NOTE: THIS DRAWING MAY BE A REDUCED SCALE PRINT OF THE ORIGINAL DRAWING. UTILIZE GRAPHIC SCALES TO VERIFY IF DRAWING IS A REDUCTION, AND ADJUST SCALES ACCORDINGLY TO THE GRAPHIC SCALES SHOWN.

SPEC NO. 2022-07	WBS NO. EC-0008-01
REFERENCES	
PROJECT ENGINEER	
CONTRACTOR	
CONSTRUCTION STARTED	
CONSTRUCTION COMPLETED	
COST	INSPECTOR

REVISIONS | DATE / APPROVED

PORT of SAN DIEGO Waterfront of Opportunity

DESIGNED MNM/JKS
DRAWN D. BURROW
CHECKED MNM/JKS

APPROVAL RECOMMENDED — DISTRICT PROJECT MANAGER
APPROVED Chris Brooks 8/10/22 — DISTRICT MANAGER-DESIGN

SAN DIEGO, CALIFORNIA

IMPERIAL BEACH PIER ENHANCEMENTS - PHASE 2

CANOPY DECK DETAILS

DATE JULY 26, 2022
A/E NO. S-501
SHEET 12 OF 30
DRAWING NO. IB-2022-01
REV. -

Aug 09, 2022 - 5:20pm Q:\SD\212326-03 ib pier enhancements phase 2\20 CADD_Active_Design_03 STRUCTURAL\IB-2022-01-S-500.dwg

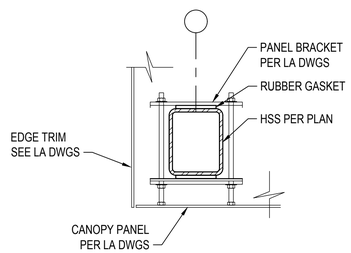

C1 DETAIL - CANOPY PANEL - EDGE BM SUPPORT
SCALE: 1 1/2" = 1'-0"

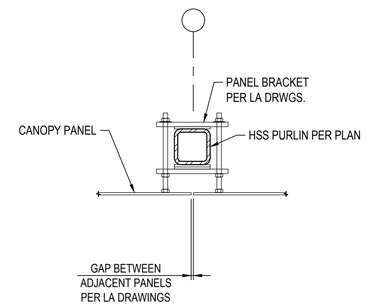

C2 DETAIL - CANOPY PANEL - INTERIOR PURLIN SUPPORT
SCALE: 1 1/2" = 1'-0"

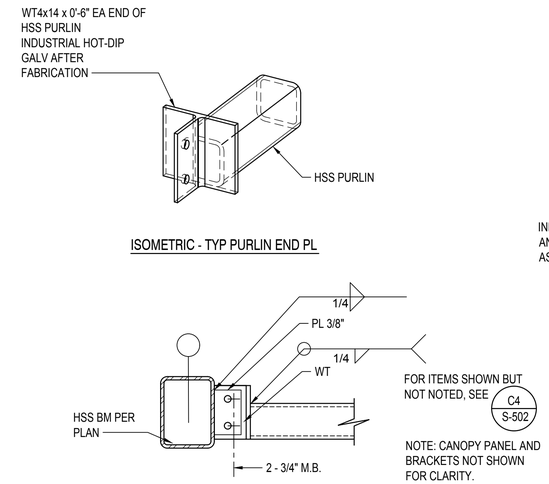

C3 DETAIL - PURLIN-EDGE BM SUPPORT
SCALE: 1 1/2" = 1'-0"

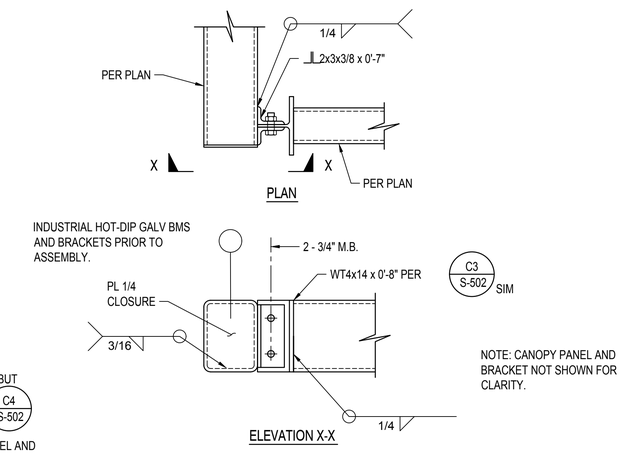

C4 DETAIL - EDGE BM CONNECTION
SCALE: 1 1/2" = 1'-0"

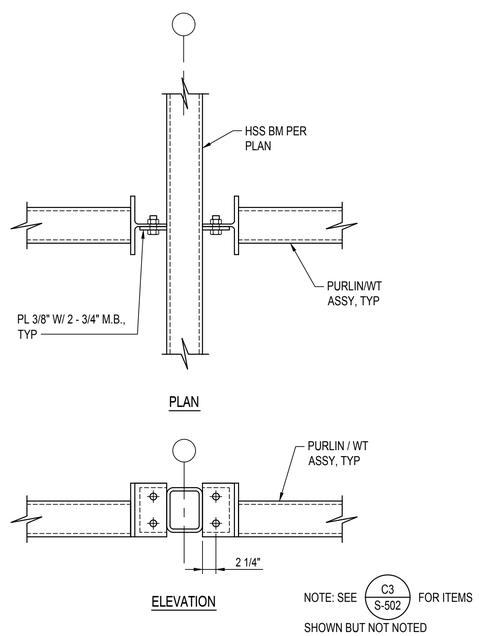

A1 DETAIL - INTERIOR BM - PURLIN SUPPORT
SCALE: 1 1/2" = 1'-0"

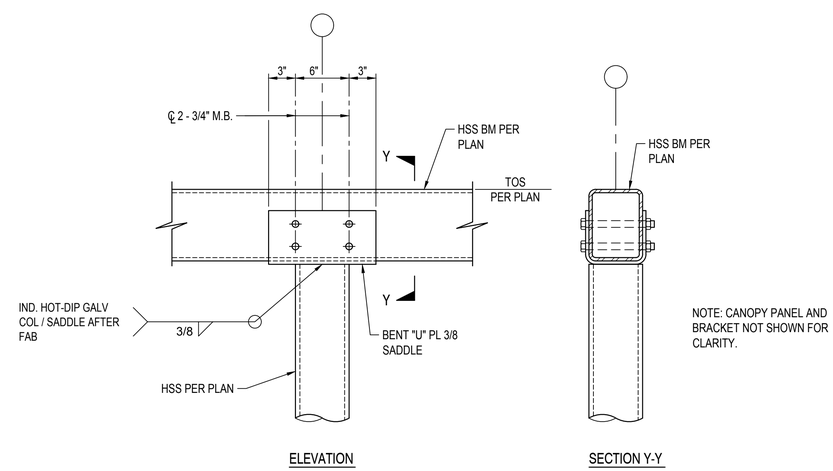

A2 DETAIL - EXTERIOR BM TO COLUMN CONNECTION
SCALE: 1 1/2" = 1'-0"

1'-0" 0'-0" 6" 1'-0"
SCALE: 1 1/2"=1'-0"

REGISTERED PROFESSIONAL ENGINEER
JACK N. MARTIN
No. S3045
EXP. 6/30/2024
STRUCTURAL
STATE OF CALIFORNIA

moffatt & nichol

RECORD DRAWING
REVIEWED BY:
ENGINEER OF RECORD
DATE:

NOTE:
THIS DRAWING MAY BE A REDUCED SCALE PRINT OF THE ORIGINAL DRAWING. UTILIZE GRAPHIC SCALES TO VERIFY IF DRAWING IS A REDUCTION, AND ADJUST SCALES ACCORDINGLY TO THE GRAPHIC SCALES SHOWN.

SPEC NO. 2022-07	WBS NO. EC-0008-01
REFERENCES	
PROJECT ENGINEER	
CONTRACTOR	
CONSTRUCTION STARTED	
CONSTRUCTION COMPLETED	
COST	INSPECTOR

REVISIONS | DATE / APPROVED

PORT of SAN DIEGO
Waterfront of Opportunity

DESIGNED MNM/JKS
DRAWN D. BURROW
CHECKED MNM/JKS

APPROVAL RECOMMENDED
DISTRICT PROJECT MANAGER
APPROVED Chris Brooks 8/10/22
DISTRICT MANAGER-DESIGN

SAN DIEGO, CALIFORNIA
IMPERIAL BEACH PIER
ENHANCEMENTS - PHASE 2
CANOPY FRAMING DETAILS

DATE JULY 26, 2022
A/E NO. S-502
SHEET 13 OF 30
DRAWING NO. IB-2022-01
REV. -

Aug 09, 2022 - 5:20pm Q:\SD\212326-03 ib pier enhancements phase 2\20 CADD_Active_Design_03 STRUCTURAL\IB-2022-01-S-510.dwg

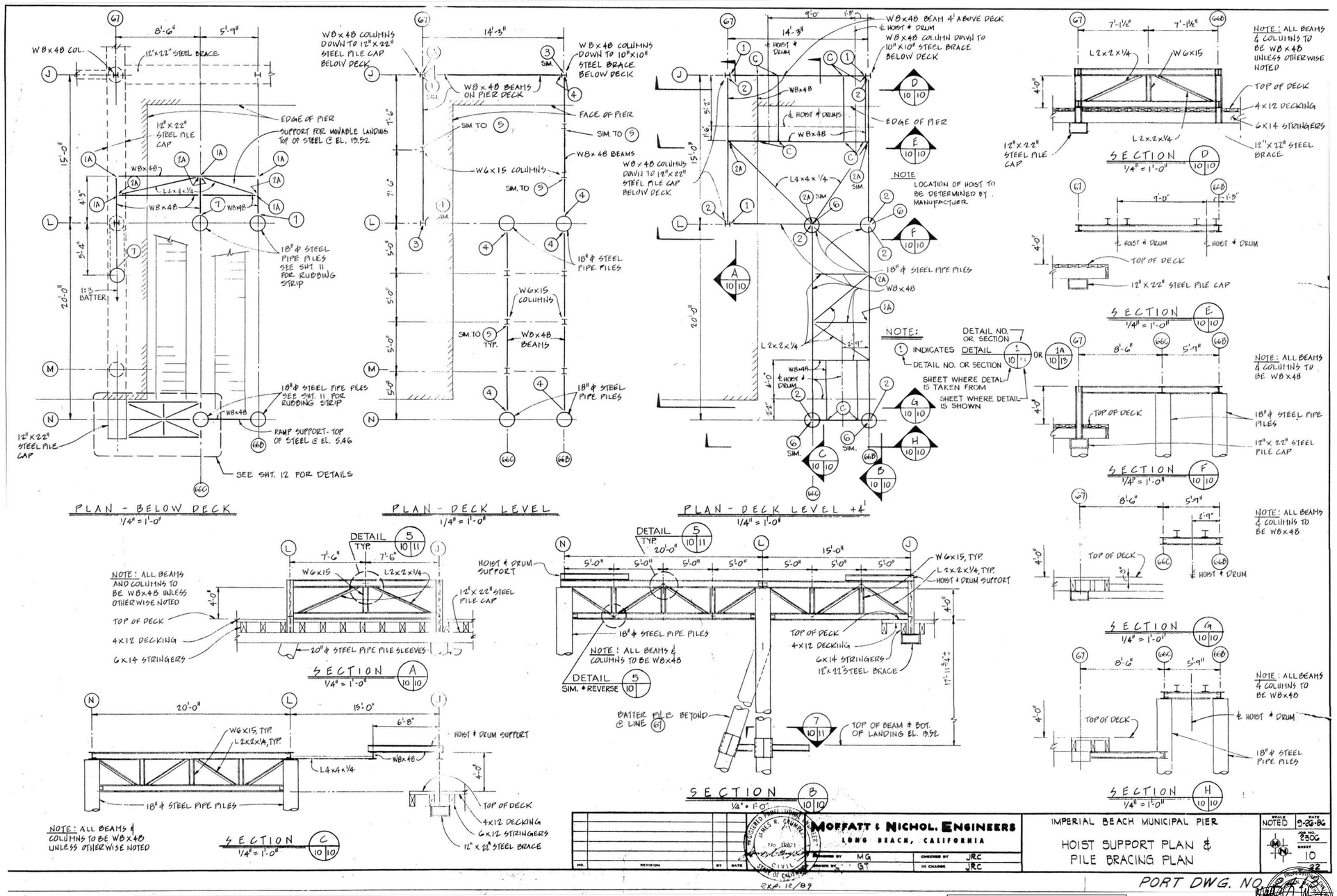

REFERENCE DRAWING

moffatt & nichol

RECORD DRAWING REVIEWED BY: ENGINEER OF RECORD DATE:	NOTE: THIS DRAWING MAY BE A REDUCED SCALE PRINT OF THE ORIGINAL DRAWING. UTILIZE GRAPHIC SCALES TO VERIFY IF DRAWING IS A REDUCTION, AND ADJUST SCALES ACCORDINGLY TO THE GRAPHIC SCALES SHOWN.	SPEC NO. 2022-07 WBS NO. EC-0008-01 REFERENCES PROJECT ENGINEER CONTRACTOR CONSTRUCTION STARTED CONSTRUCTION COMPLETED COST INSPECTOR	REVISIONS	DATE / APPROVED	PORT of SAN DIEGO Waterfront of Opportunity	DESIGNED MNM/JKS DRAWN D. BURROW CHECKED MNM/JKS	APPROVAL RECOMMENDED DISTRICT PROJECT MANAGER APPROVED Chris Brooks 8/10/22 DISTRICT MANAGER–DESIGN	SAN DIEGO, CALIFORNIA IMPERIAL BEACH PIER ENHANCEMENTS - PHASE 2 REFERENCE DRAWING	DATE JULY 26, 2022 A/E NO. R-001 SHEET 14 OF 30 DRAWING NO. IB-2022-01 REV. -

Aug 09, 2022 - 10:34am Q:\SD\212326-03 ib pier enhancements phase 2\20 CADD\ Active\ Design\ 04 REFERENCE\IB-2022-01-R-001.dwg

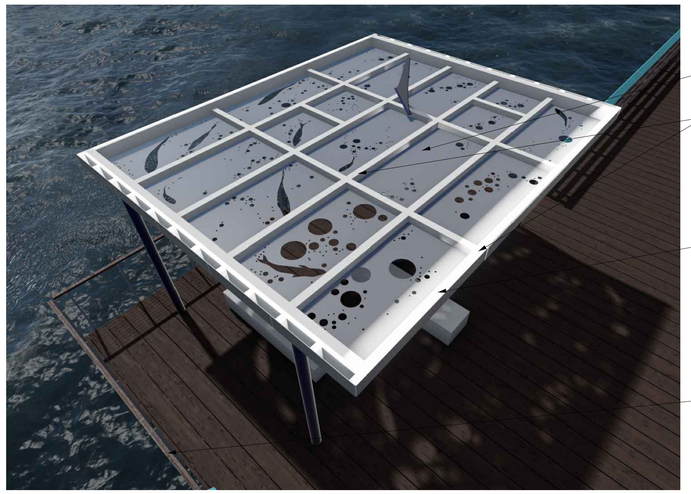

STAINLESS STEEL OVERHEAD CANOPY, SEE SHEET LA002

FRAMING MEMBERS, TYP. RE; STRUCT

LED PERIMETER ACCENT LIGHT, RE: ELEC

LIT CABLE GUARD RAIL , SEE SHEET LA005

NOTE: ILLUSTRATION IS APPROXIMATE AND FOR REFERENCE PURPOSES ONLY

1 CONCEPTUAL 3D CANOPY - BIRDSEYE
SCALE: NTS

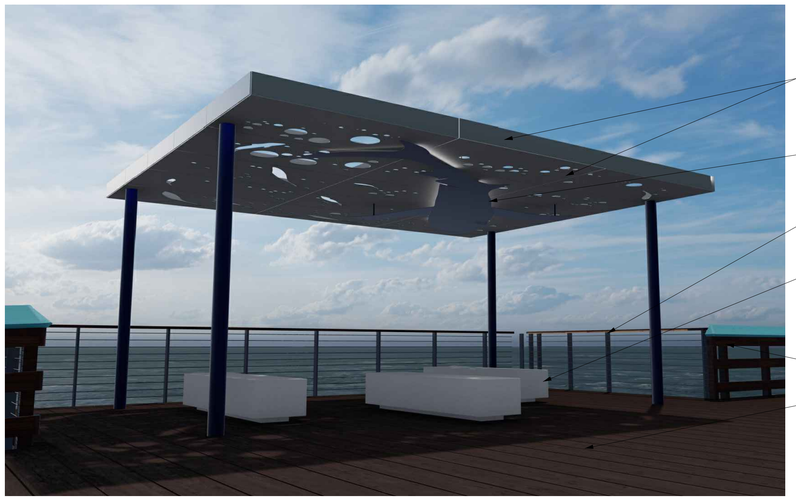

STAINLESS STEEL OVERHEAD CANOPY, SEE SHEET LA002

STAINLESS STEEL UNDER HANGING SHARK CUT-OUT WITH BACKLIGHT, SEE 3/LA002

LIT CABLE GUARD RAIL, SEE SHEET LA005

BENCHES NOT IN CONTRACT, FOR ILLUSTRATIVE PURPOSES ONLY

EXISTING GUARDRAIL TO REMAIN

EXISTING DECK TO REMAIN

NOTE: ILLUSTRATION IS APPROXIMATE AND FOR REFERENCE PURPOSES ONLY

2 CONCEPTUAL 3D CANOPY - EYE LEVEL
SCALE: NTS

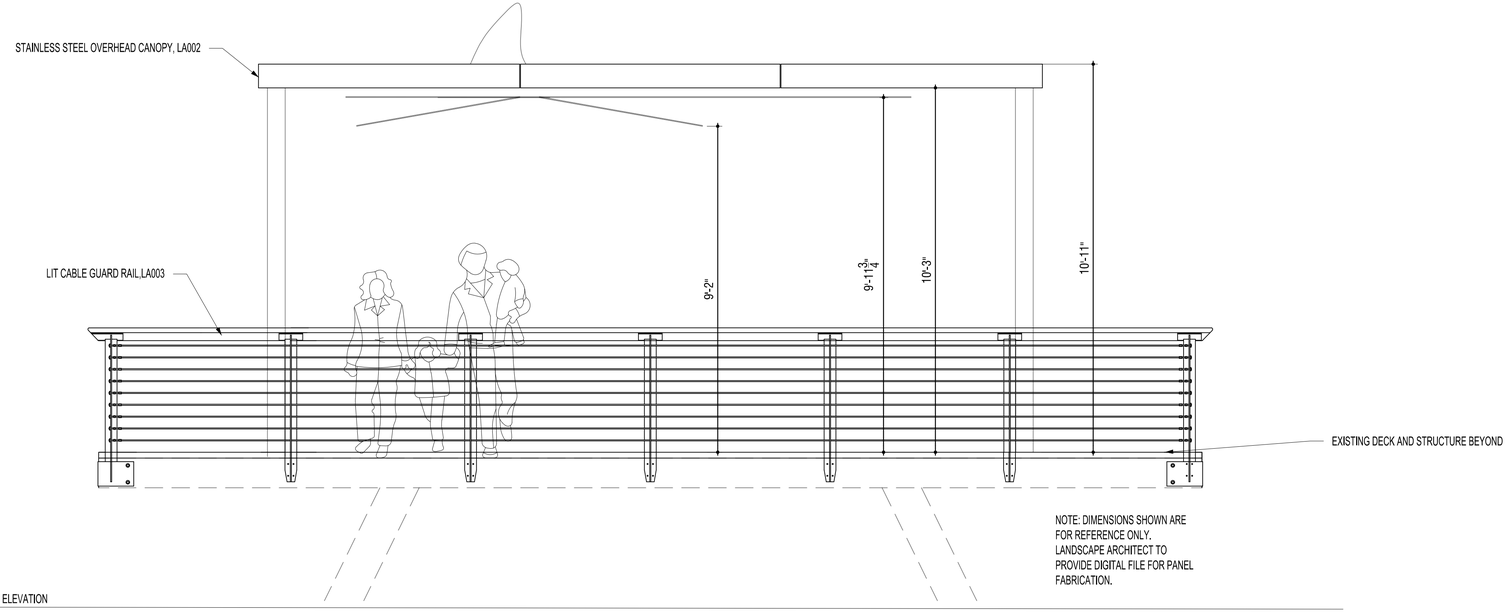

NOTE: DIMENSIONS SHOWN ARE FOR REFERENCE ONLY. LANDSCAPE ARCHITECT TO PROVIDE DIGITAL FILE FOR PANEL FABRICATION.

3 CANOPY AND GUARD RAIL ELEVATION
SCALE: SCALE 3/ = 1'

LICENSED LANDSCAPE ARCHITECT
MARK W. JOHNSON NO. 5513
STATE OF CALIFORNIA
Signature
06-27-2022
Stamp Date
06-30-2022
Date

CIVITAS

RECORD DRAWING
REVIEWED BY:
ENGINEER OF RECORD
DATE:

NOTE:
THIS DRAWING MAY BE A REDUCED SCALE PRINT OF THE ORIGINAL DRAWING. UTILIZE GRAPHIC SCALES TO VERIFY IF DRAWING IS A REDUCTION, AND ADJUST SCALES ACCORDINGLY TO THE GRAPHIC SCALES SHOWN.

SPEC NO. 2022-07	WBS NO. EC-0008-01
REFERENCES	
PROJECT ENGINEER	
CONTRACTOR	
CONSTRUCTION STARTED	
CONSTRUCTION COMPLETED	
COST	INSPECTOR

REVISIONS | DATE / APPROVED

PORT of SAN DIEGO
Waterfront of Opportunity

DESIGNED K.HOPKINS
DRAWN K.HOPKINS
CHECKED S.JORDAN

APPROVAL RECOMMENDED — DISTRICT PROJECT MANAGER
APPROVED Chris Brooks 8/10/22 — DISTRICT MANAGER-DESIGN

IMPERIAL BEACH PIER
ENHANCEMENTS - PHASE 2
3D CONCEPT

DATE JUNE 27, 2022
A/E NO. LA001
SHEET 15 OF 30
DRAWING NO. IB-2022-01
REV. -

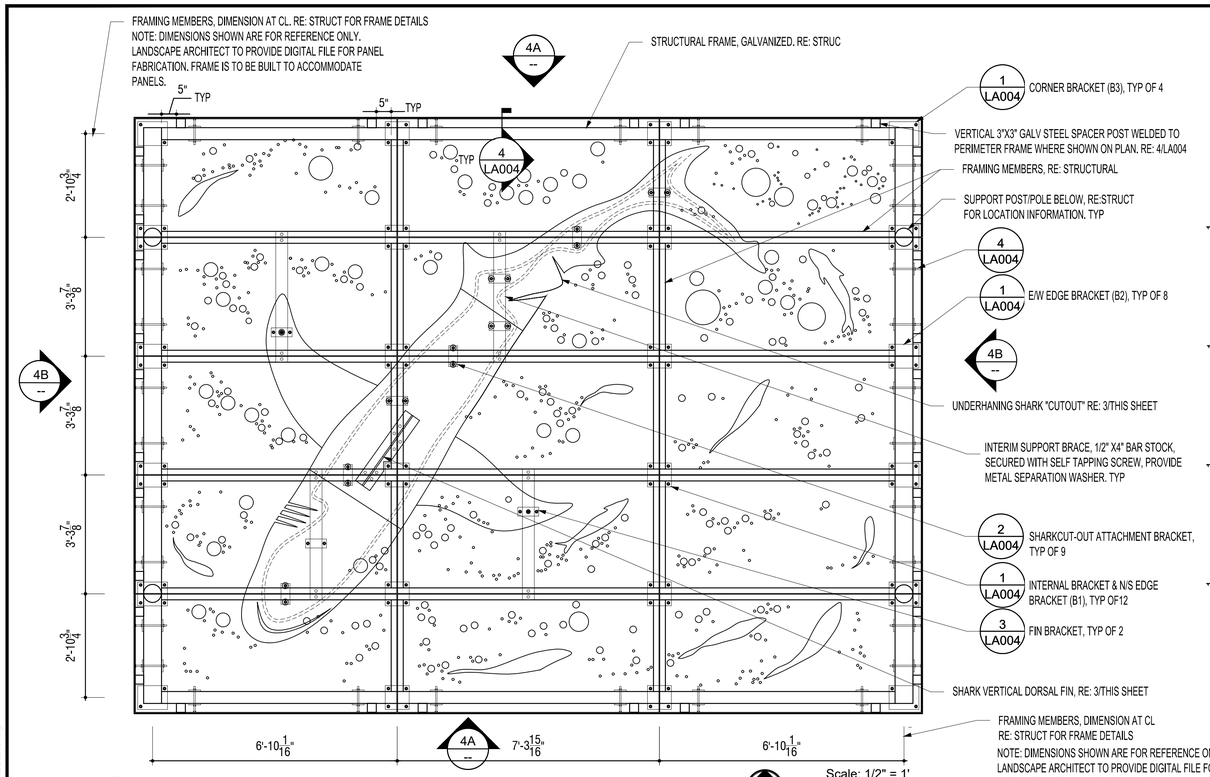

1 CANOPY LAYOUT
SCALE: 1/2"=1'

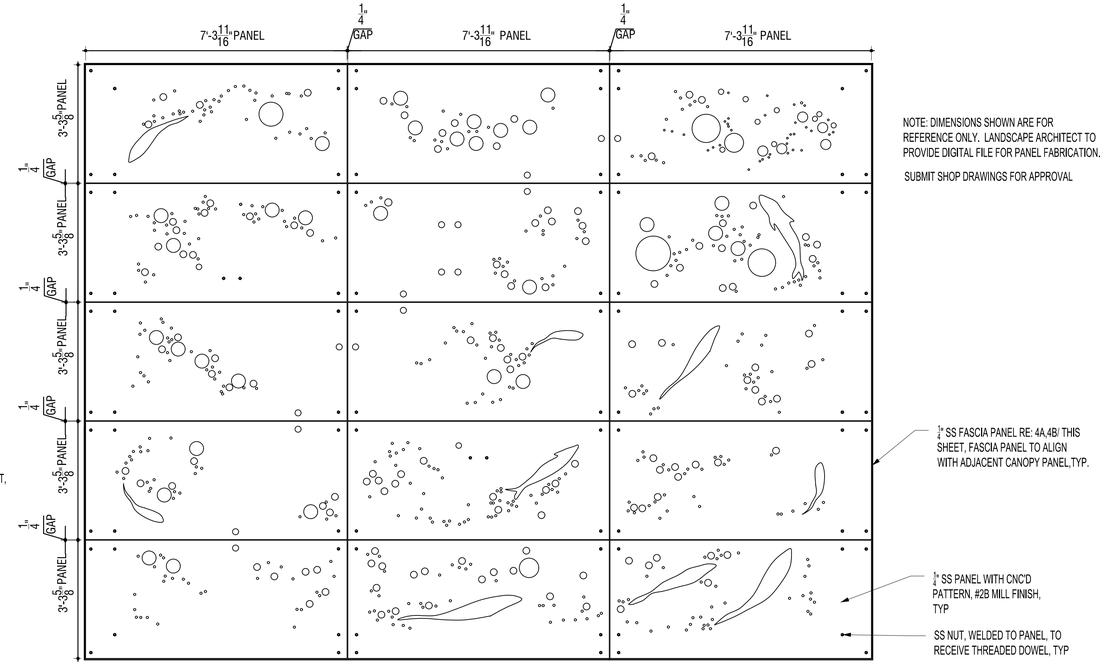

2 CANOPY "SEA" PANEL LAYOUT
SCALE: 1/2"=1'

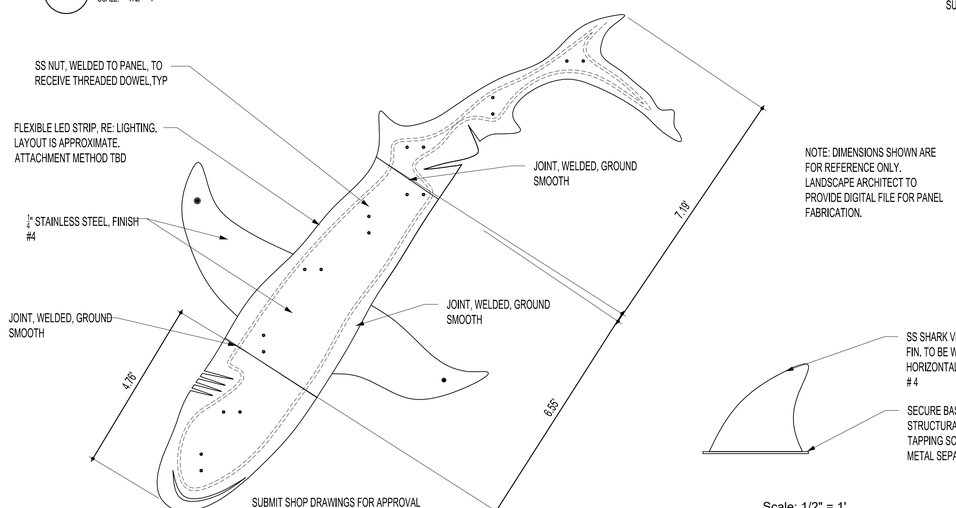

3 CANOPY "SHARK" CUTOUT LAYOUT
SCALE: 1/2"=1'

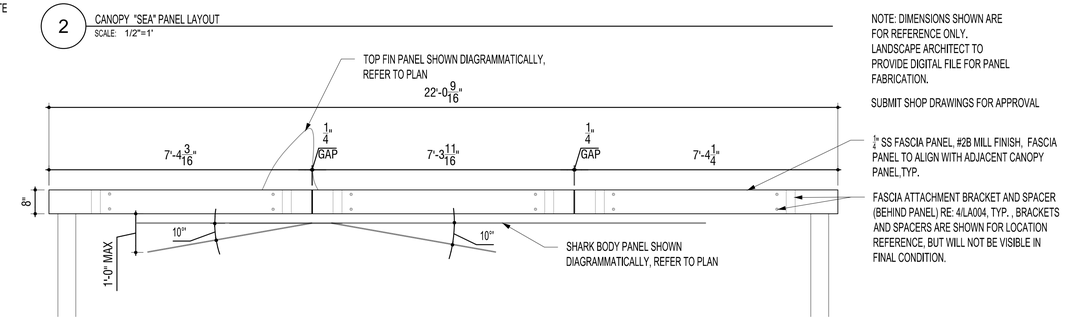

4A CANOPY ELEVATION, FASCIA PANEL - NORTH AND SOUTH SIDES
SCALE: 1/2"=1'

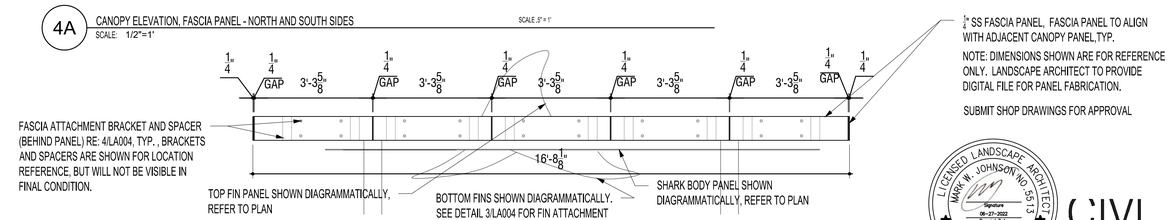

4B CANOPY ELEVATION, FASCIA PANEL - EAST AND WEST SIDE
SCALE: 1/2"=1'

LICENSED LANDSCAPE ARCHITECT
MARK R. JOHNSON NO. 5513
Signature
06-27-2022
Expiration Date
STATE OF CALIFORNIA

CIVITAS

RECORD DRAWING
REVIEWED BY:
ENGINEER OF RECORD
DATE:

NOTE:
THIS DRAWING MAY BE A REDUCED SCALE PRINT OF THE ORIGINAL DRAWING. UTILIZE GRAPHIC SCALES TO VERIFY IF DRAWING IS A REDUCTION, AND ADJUST SCALES ACCORDINGLY TO THE GRAPHIC SCALES SHOWN.

SPEC NO. 2022-07	WBS NO. EC-0008-01
REFERENCES	
PROJECT ENGINEER	
CONTRACTOR	
CONSTRUCTION STARTED	
CONSTRUCTION COMPLETED	
COST	INSPECTOR

REVISIONS | DATE / APPROVED

PORT of SAN DIEGO
Waterfront of Opportunity

DESIGNED K HOPKINS
DRAWN K HOPKINS
CHECKED S JORDAN

APPROVAL RECOMMENDED
DISTRICT PROJECT MANAGER
APPROVED Chris Brooks 8/10/22
DISTRICT MANAGER–DESIGN

IMPERIAL BEACH PIER
ENHANCEMENTS - PHASE 2
CANOPY PLAN

DATE JUNE 27, 2022
A/E NO. LA002
SHEET 16 OF 30
DRAWING NO. IB-2022-01
REV. -

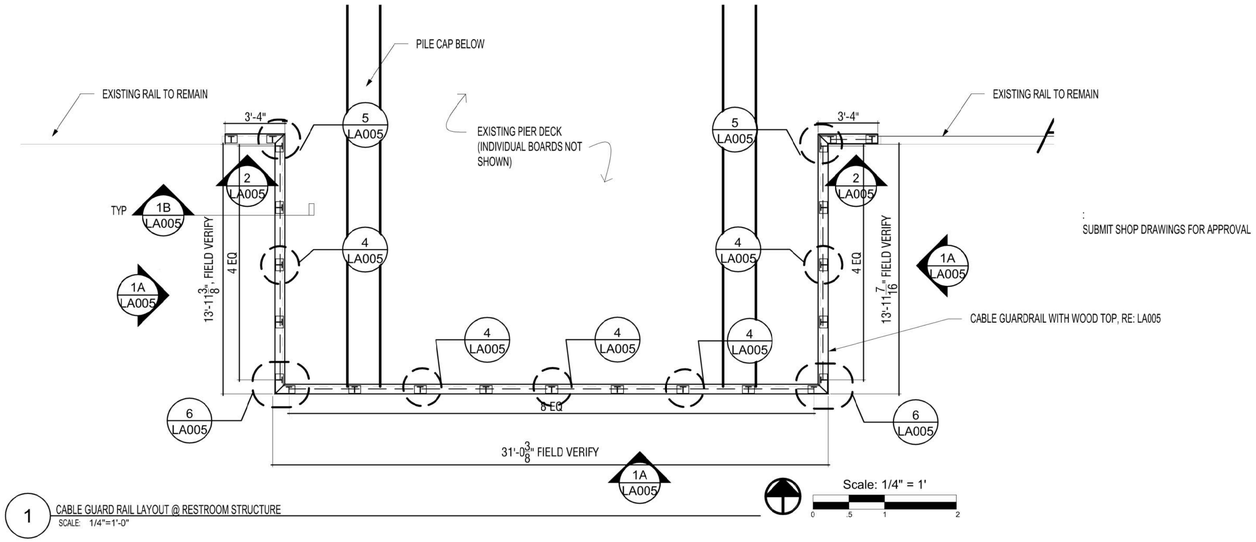

1 CABLE GUARD RAIL LAYOUT @ RESTROOM STRUCTURE
SCALE 1/4"=1'-0"

:
SUBMIT SHOP DRAWINGS FOR APPROVAL

ADDITIVE BID ITEM NO. 1

SEE S-120 FOR PIER END 6' FENCE LAYOUT

LICENSED LANDSCAPE ARCHITECT
MARK W. JOHNSON NO. 5513
STATE OF CALIFORNIA
Signature
06-27-2022
Revised Date
06-30-2022
Date

CIVITAS

RECORD DRAWING
REVIEWED BY:
ENGINEER OF RECORD
DATE:

NOTE:
THIS DRAWING MAY BE A REDUCED SCALE PRINT OF THE ORIGINAL DRAWING. UTILIZE GRAPHIC SCALES TO VERIFY IF DRAWING IS A REDUCTION, AND ADJUST SCALES ACCORDINGLY TO THE GRAPHIC SCALES SHOWN.

SPEC NO. 2022-08	WBS NO. CP-0021-01
REFERENCES	
PROJECT ENGINEER	
CONTRACTOR	
CONSTRUCTION STARTED	
CONSTRUCTION COMPLETED	
COST	INSPECTOR

REVISIONS | DATE / APPROVED

PORT of SAN DIEGO
Waterfront of Opportunity

DESIGNED K HOPKINS
DRAWN K HOPKINS
CHECKED S JORDAN

APPROVAL RECOMMENDED
DISTRICT PROJECT MANAGER
APPROVED Chris Brooke 8/10/22
DISTRICT MANAGER-DESIGN

IMPERIAL BEACH PIER
ENHANCEMENTS - PHASE 2
GUARDRAIL PLAN

DATE AUGUST, 9, 2022
A/E NO. LA003
SHEET 17 OF 30
DRAWING NO. IB-2022-01
REV. -

NOTE: DIMENSIONS SHOWN ARE APPROX. LANDSCAPE ARCHITECT TO PROVIDE DIGITAL FILE FOR FABRICATION. BRACKETS ARE TO BE MACHINED OR CNC'D WITH PRECISION TO MATCH PANELS TO ENSURE LOW INSTALLATION ERROR TOLERANCE.

SUBMIT SHOP DRAWINGS FOR APPROVAL

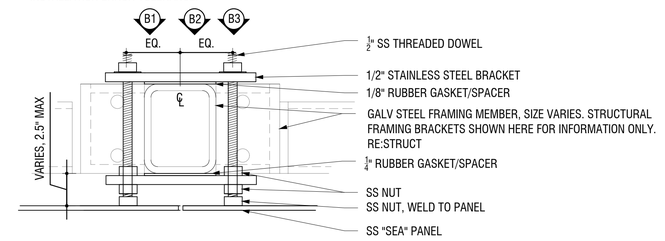

A. SECTION

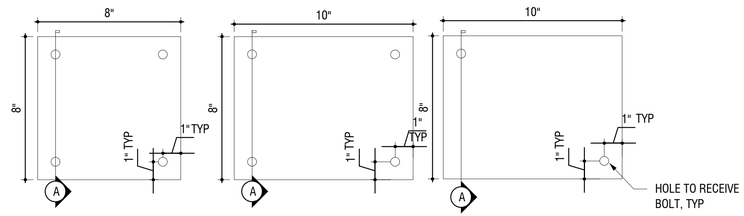

B1.INTERIOR BRACKET PLAN B2. EDGE BRACKET PLAN B3. CORNER BRACKET PLAN

1 CANOPY PANEL ATTACHMENT BRACKET

SCALE: 3" = 1'-0"

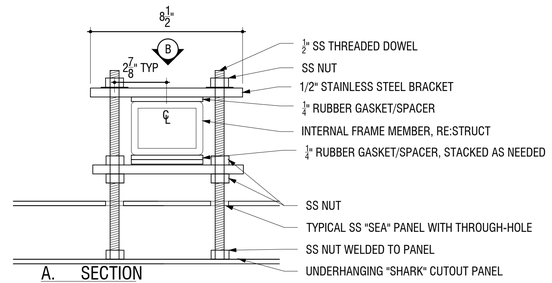

A. SECTION

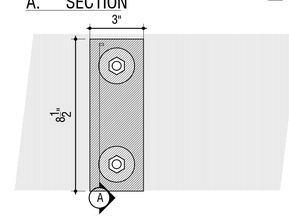

B. PLAN

NOTE: DIMENSIONS SHOWN ARE APPROX. LANDSCAPE ARCHITECT TO PROVIDE DIGITAL FILE FOR FABRICATION. BRACKETS ARE TO BE MACHINED OR CNC'D WITH PRECISION TO MATCH PANELS TO ENSURE LOW INSTALLATION ERROR TOLERANCE.

SUBMIT SHOP DRAWINGS FOR APPROVAL

2 SHARK CUT-OUT ATTACHMENT BRACKET

SCALE: 3" = 1'-0"

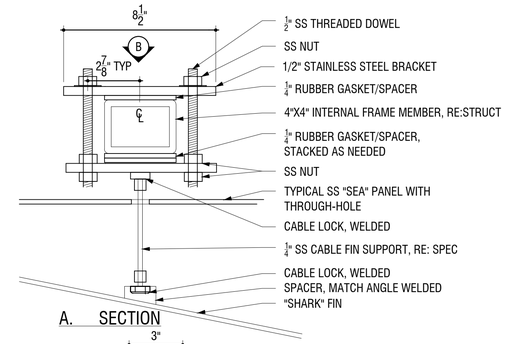

A. SECTION

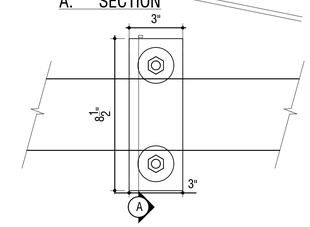

SUBMIT SHOP DRAWINGS FOR APPROVAL

3 SHARK FIN ATTACHMENT BRACKET

SCALE: 3" = 1'-0"

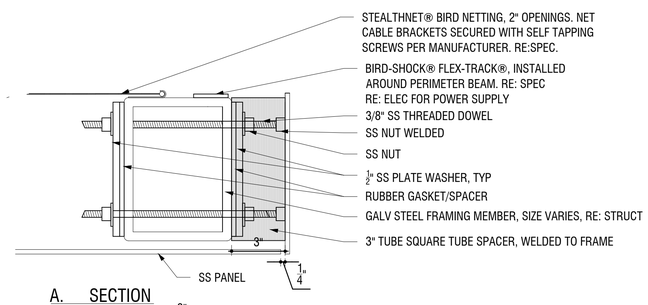

A. SECTION

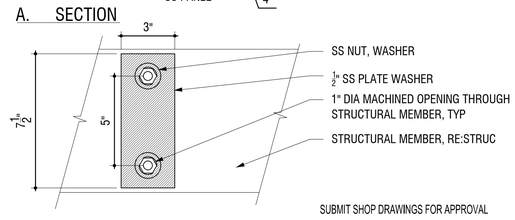

SUBMIT SHOP DRAWINGS FOR APPROVAL

B. PLAN

4 FASCIA ATTACHMENT BRACKET

SCALE: 3" = 1'-0"

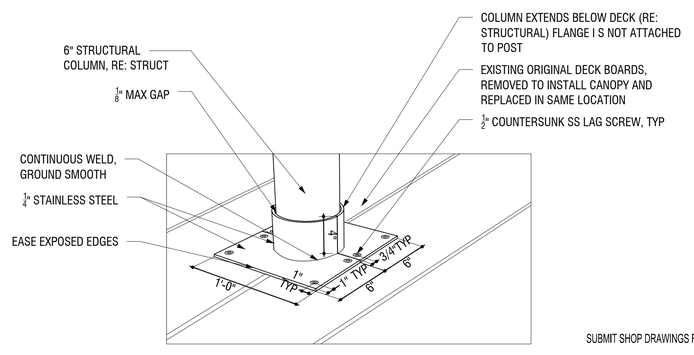

SUBMIT SHOP DRAWINGS FOR APPROVAL

5 COLUMN BASE DECORATIVE FLANGE

SCALE: 1 1/2" = 1'-0"

LICENSED LANDSCAPE ARCHITECT MARK W. JOHNSON NO. 5513 STATE OF CALIFORNIA
Signature
06-27-2022
Date
Signature
Date

CIVITAS

RECORD DRAWING REVIEWED BY: ENGINEER OF RECORD DATE:	NOTE: THIS DRAWING MAY BE A REDUCED SCALE PRINT OF THE ORIGINAL DRAWING. UTILIZE GRAPHIC SCALES TO VERIFY IF DRAWING IS A REDUCTION, AND ADJUST SCALES ACCORDINGLY TO THE GRAPHIC SCALES SHOWN.	SPEC NO. 2022-07 WBS NO. EC-0008-01 REFERENCES PROJECT ENGINEER CONTRACTOR CONSTRUCTION STARTED CONSTRUCTION COMPLETED COST INSPECTOR	REVISIONS	DATE / APPROVED	PORT of SAN DIEGO Waterfront of Opportunity	DESIGNED K HOPKINS DRAWN K HOPKINS CHECKED S JORDAN	APPROVAL RECOMMENDED DISTRICT PROJECT MANAGER APPROVED Chris Brooks 8/10/22 DISTRICT MANAGER–DESIGN

IMPERIAL BEACH PIER ENHANCEMENTS - PHASE 2

CANOPY DETAILS

DATE	JUNE 27, 2022
A/E NO.	LA004
SHEET	18 OF 30
DRAWING NO.	IB-2022-01
REV.	-

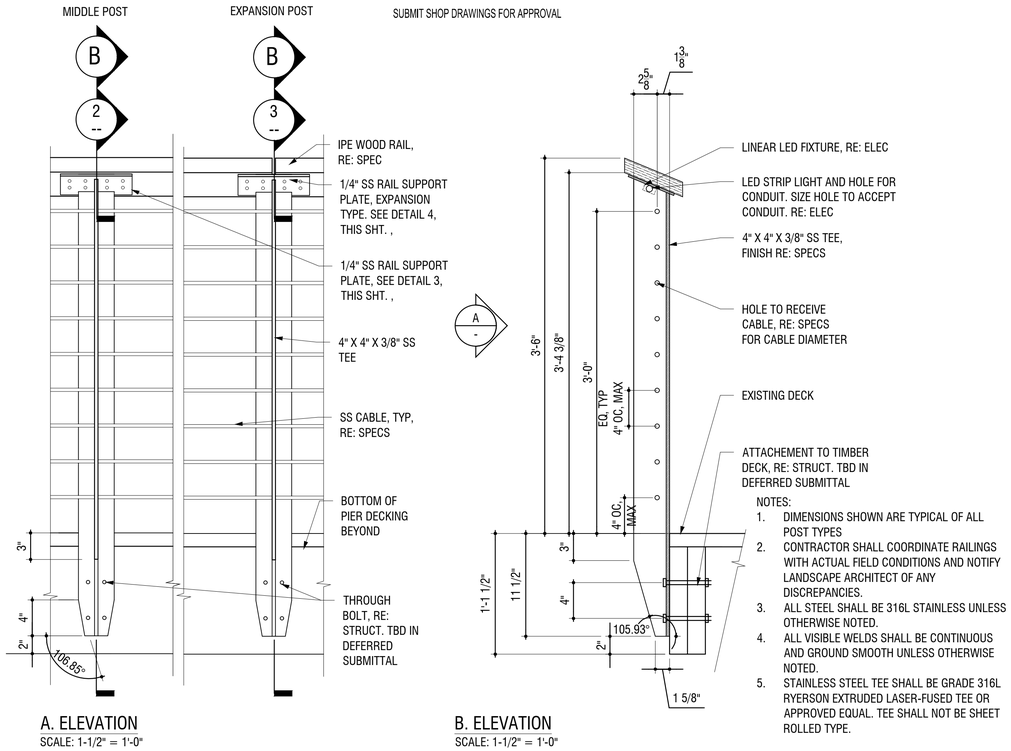

A. ELEVATION
SCALE: 1-1/2" = 1'-0"

B. ELEVATION
SCALE: 1-1/2" = 1'-0"

NOTES:
1. DIMENSIONS SHOWN ARE TYPICAL OF ALL POST TYPES
2. CONTRACTOR SHALL COORDINATE RAILINGS WITH ACTUAL FIELD CONDITIONS AND NOTIFY LANDSCAPE ARCHITECT OF ANY DISCREPANCIES.
3. ALL STEEL SHALL BE 316L STAINLESS UNLESS OTHERWISE NOTED.
4. ALL VISIBLE WELDS SHALL BE CONTINUOUS AND GROUND SMOOTH UNLESS OTHERWISE NOTED.
5. STAINLESS STEEL TEE SHALL BE GRADE 316L RYERSON EXTRUDED LASER-FUSED TEE OR APPROVED EQUAL. TEE SHALL NOT BE SHEET ROLLED TYPE.

1 TYPICAL CABLE GUARD RAIL SECTION AND ELEVATION
SCALE: 1 1/2" = 1'-0"

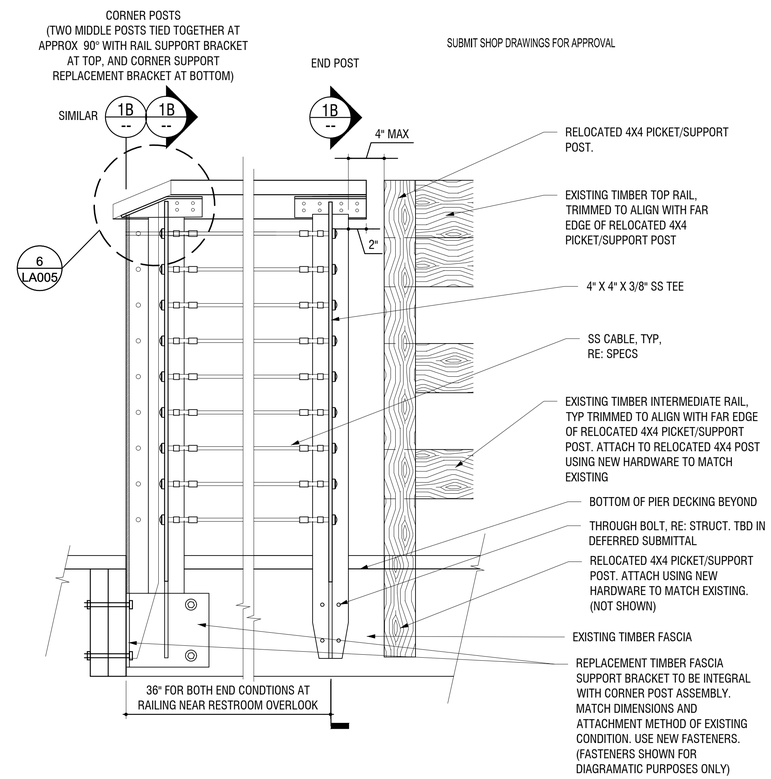

2 GUARDRAIL - INSIDE CORNER ELEVATION AND END CONDITION
SCALE: 1 1/2" = 1'-0"

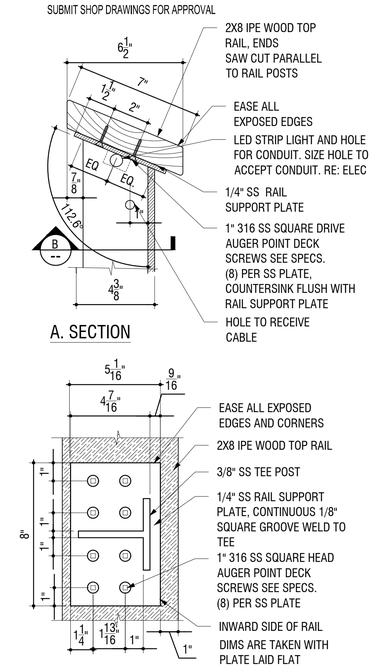

A. SECTION

B. REFLECTED RAIL SUPPORT PLAN

3 GUARD RAIL WOOD TOP
SCALE: 3" = 1'-0"

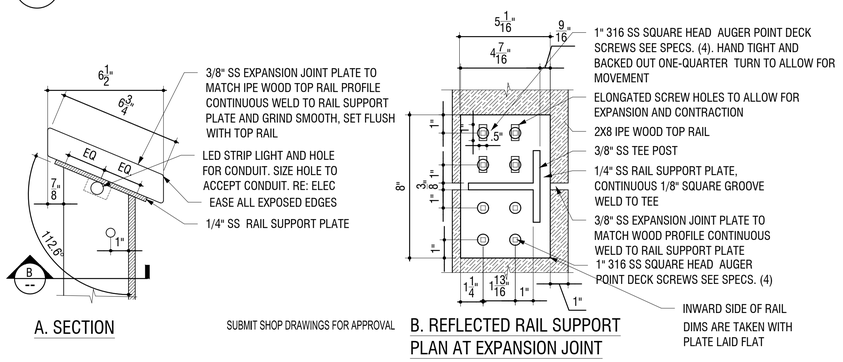

A. SECTION

B. REFLECTED RAIL SUPPORT PLAN AT EXPANSION JOINT

4 GUARD RAIL WOOD TOP EXPANSION JOINT
SCALE: 3" = 1'-0"

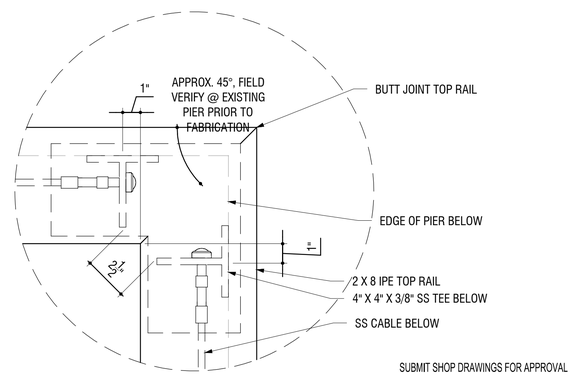

5 GUARDRAIL INSIDE CORNER
SCALE: 3" = 1'-0"

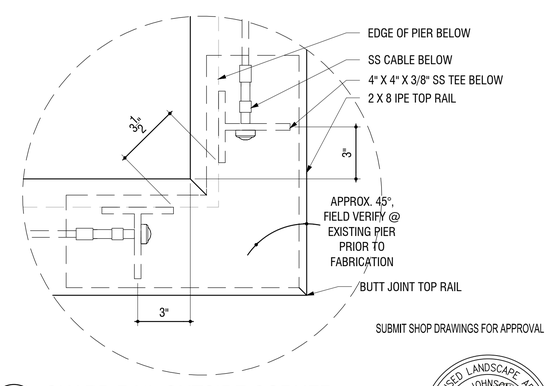

6 GUARD RAIL OUTSIDE CORNER
SCALE: 3" = 1'-0"

LICENSED LANDSCAPE ARCHITECT MARK W. JOHNSON NO. 5513 STATE OF CALIFORNIA
Signature 06-27-2022 Date

CIVITAS

RECORD DRAWING REVIEWED BY: ENGINEER OF RECORD DATE:	NOTE: THIS DRAWING MAY BE A REDUCED SCALE PRINT OF THE ORIGINAL DRAWING. UTILIZE GRAPHIC SCALES TO VERIFY IF DRAWING IS A REDUCTION, AND ADJUST SCALES ACCORDINGLY TO THE GRAPHIC SCALES SHOWN.	SPEC NO. 2022-07 WBS NO. EC-0008-01	REVISIONS	DATE / APPROVED	PORT of SAN DIEGO Waterfront of Opportunity	DESIGNED K.HOPKINS DRAWN K.HOPKINS CHECKED S.JORDAN	APPROVAL RECOMMENDED DISTRICT PROJECT MANAGER APPROVED Chris Brooks 8/10/22 DISTRICT MANAGER–DESIGN	IMPERIAL BEACH PIER ENHANCEMENTS - PHASE 2 GUARDRAIL DETAILS	DATE JUNE 27, 2022 A/E NO. LA005 SHEET 19 OF 30 DRAWING NO. IB-2022-01 REV. -
		REFERENCES							
		PROJECT ENGINEER							
		CONTRACTOR							
		CONSTRUCTION STARTED							
		CONSTRUCTION COMPLETED							
		COST INSPECTOR							

ADDITIVE BID ITEM NO. 1

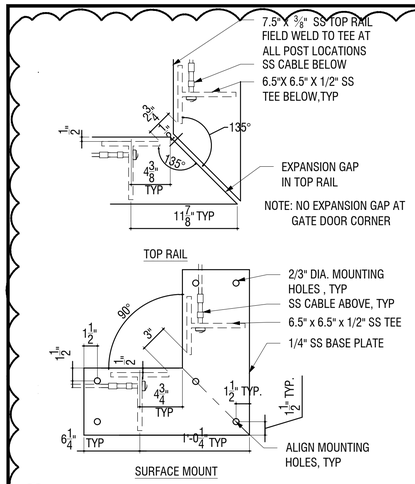

1 CABLE FENCE INSIDE CORNER
SCALE: 1 1/2" = 1'-0"

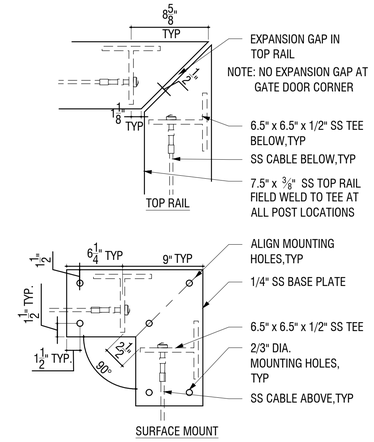

2 CABLE FENCE OUTSIDE CORNER
SCALE: 1 1/2" = 1'-0"

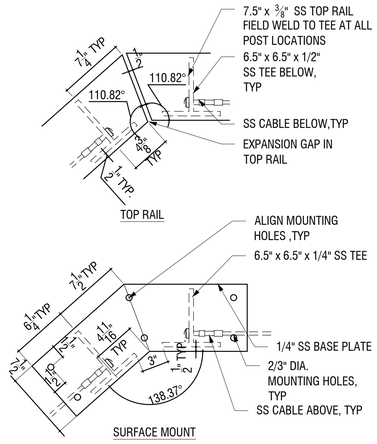

3 CABLE FENCE CORNER ANGLE 1
SCALE: 1 1/2" = 1'-0"

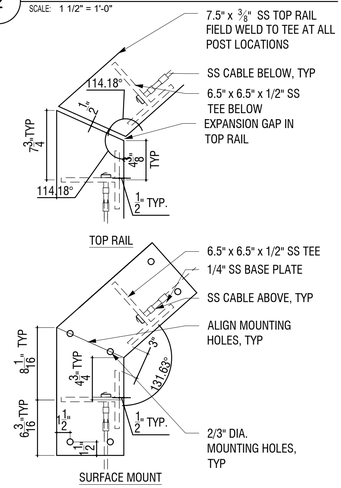

4 CABLE FENCE CORNER ANGLE 2
SCALE: 1 1/2" = 1'-0"

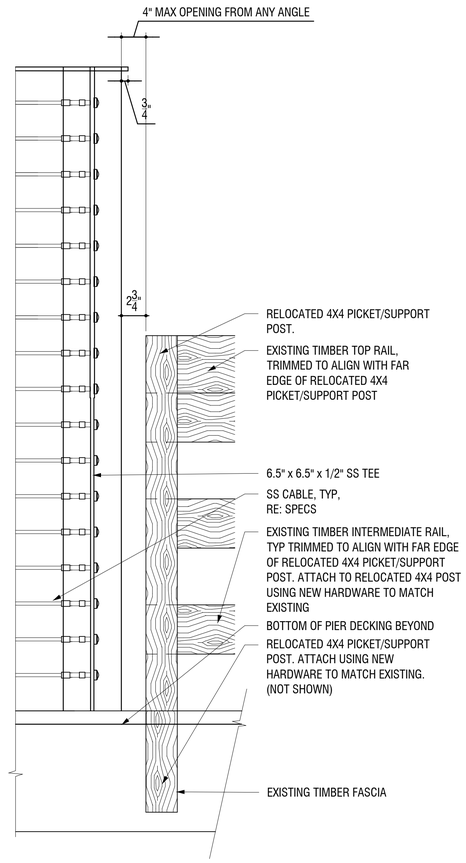

6 CABLE FENCE - END CONDITION
SCALE: 1 1/2" = 1'-0"

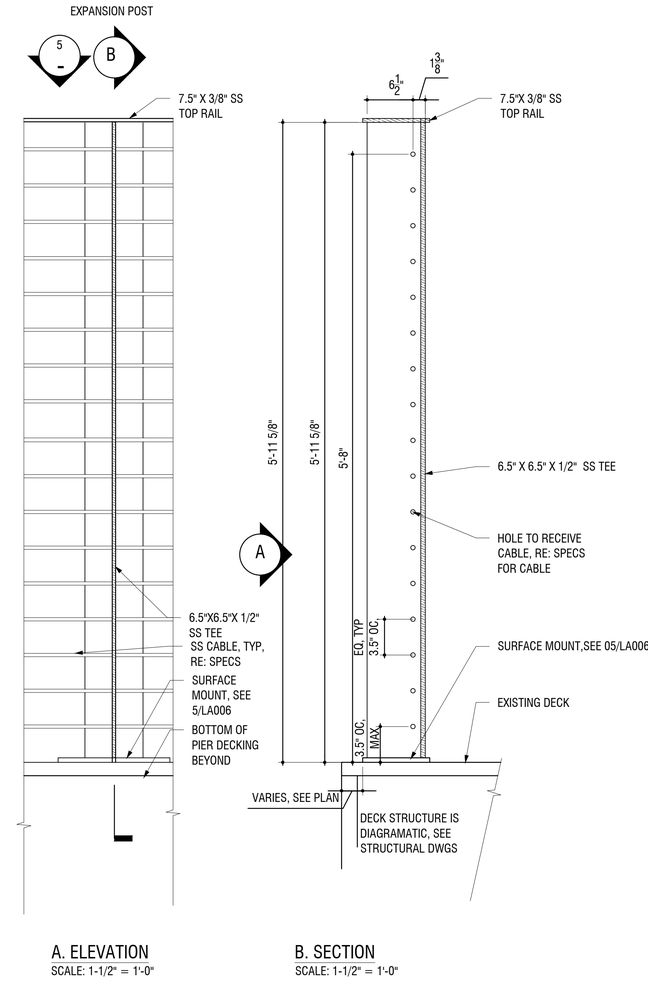

A. ELEVATION
SCALE: 1-1/2" = 1'-0"

B. SECTION
SCALE: 1-1/2" = 1'-0"

7 CABLE FENCE - TYPICAL SECTION AND ELEVATION
SCALE: 1 1/2" = 1'-0"

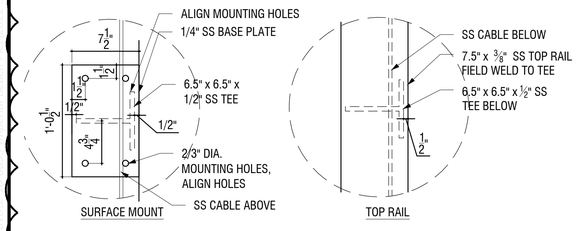

5 CABLE FENCE SS TEE
SCALE: 1 1/2" = 1'-0"

NOTES:
1. FINISH FOR STAINLESS STEEL ELEMENTS, RE: SPECS
2. FOR ALL FENCING, GUARDRAIL, AND ASSOCIATED COMPONENTS, SUBMIT FULL SHOP DRAWINGS AND MOCK UP FOR APPROVAL PRIOR TO FABRICATION. MOCKUP TO INCLUDE 1 SECTION (2 POSTS) AND MAY BE USED AS PART OF FINAL FENCE.
3. DIMENSIONS SHOWN ARE TYPICAL OF ALL POST TYPES
4. CONTRACTOR SHALL COORDINATE RAILINGS WITH ACTUAL FIELD CONDITIONS AND NOTIFY LANDSCAPE ARCHITECT OF ANY DISCREPANCIES. FIELD MEASURE ALL ADJACENT EXISTING CONDITIONS AND INCLUDE IN SHOP DRAWINGS
5. ALL STEEL SHALL BE 316L STAINLESS UNLESS OTHERWISE NOTED.
6. ALL VISIBLE WELDS SHALL BE CONTINUOUS AND GROUND SMOOTH UNLESS OTHERWISE NOTED.
7. STAINLESS STEEL TEE SHALL BE GRADE 316L RYERSON EXTRUDED LASER-FUSED TEE OR APPROVED EQUAL. TEE SHALL NOT BE SHEET ROLLED TYPE.
8. ALL FASTENERS TO BE 316 SS

LICENSED LANDSCAPE ARCHITECT MARK W. JOHNSON NO. 5513 STATE OF CALIFORNIA
Signature 06-27-2022 Exempt Date 06-30-2022 Date

CIVITAS

RECORD DRAWING
REVIEWED BY:
ENGINEER OF RECORD
DATE:

NOTE: THIS DRAWING MAY BE A REDUCED SCALE PRINT OF THE ORIGINAL DRAWING. UTILIZE GRAPHIC SCALES TO VERIFY IF DRAWING IS A REDUCTION, AND ADJUST SCALES ACCORDINGLY TO THE GRAPHIC SCALES SHOWN.

SPEC NO. 2022-08	WBS NO. CP-0021-01
REFERENCES	
PROJECT ENGINEER	
CONTRACTOR	
CONSTRUCTION STARTED	
CONSTRUCTION COMPLETED	
COST	INSPECTOR

REVISIONS | DATE / APPROVED

PORT of SAN DIEGO
Waterfront of Opportunity

DESIGNED K.HOPKINS
DRAWN K.HOPKINS
CHECKED S.JORDAN

APPROVAL RECOMMENDED — DISTRICT PROJECT MANAGER
APPROVED Chris Brooks 8/10/22 — DISTRICT MANAGER-DESIGN

IMPERIAL BEACH PIER ENHANCEMENTS - PHASE 2
CABLE FENCE DETAILS

DATE AUGUST, 9, 2022
A/E NO. LA006
SHEET 20 OF 30
DRAWING NO. IB-2022-01
REV. -

ADDITIVE BID ITEM NO. 1

NOTES:
1. FINISH FOR STAINLESS STEEL ELEMENTS, RE: SPECS
2. FOR ALL FENCING, GUARDRAIL, AND ASSOCIATED COMPONENTS, SUBMIT FULL SHOP DRAWINGS AND MOCK UP FOR APPROVAL PRIOR TO FABRICATION. MOCKUP TO INCLUDE 1 SECTION (2 POSTS) AND MAY BE USED AS PART OF FINAL FENCE.
3. DIMENSIONS SHOWN ARE TYPICAL OF ALL POST TYPES
4. CONTRACTOR SHALL COORDINATE RAILINGS WITH ACTUAL FIELD CONDITIONS AND NOTIFY LANDSCAPE ARCHITECT OF ANY DISCREPANCIES. FIELD MEASURE ALL ADJACENT EXISTING CONDITIONS AND INCLUDE IN SHOP DRAWINGS
5. ALL STEEL SHALL BE 316L STAINLESS UNLESS OTHERWISE NOTED.
6. ALL VISIBLE WELDS SHALL BE CONTINUOUS AND GROUND SMOOTH UNLESS OTHERWISE NOTED.
7. STAINLESS STEEL TEE SHALL BE GRADE 316L RYERSON EXTRUDED LASER-FUSED TEE OR APPROVED EQUAL. TEE SHALL NOT BE SHEET ROLLED TYPE.
8. ALL FASTENERS TO BE 316 SS

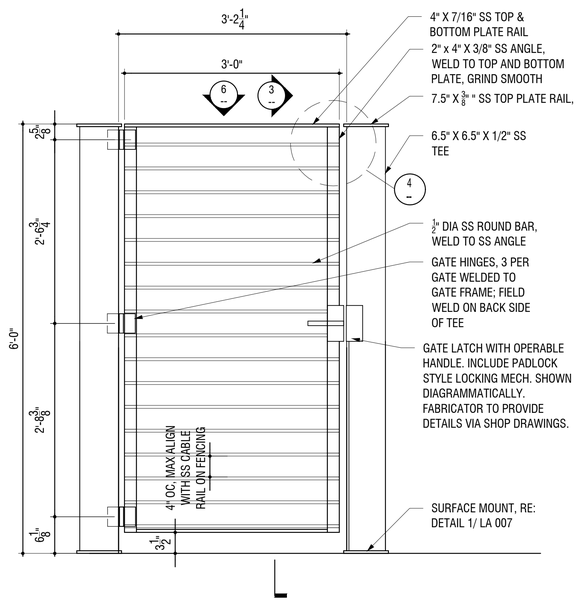

1 NORTH GATE ELEVATION
SCALE: 1" = 1'-0"

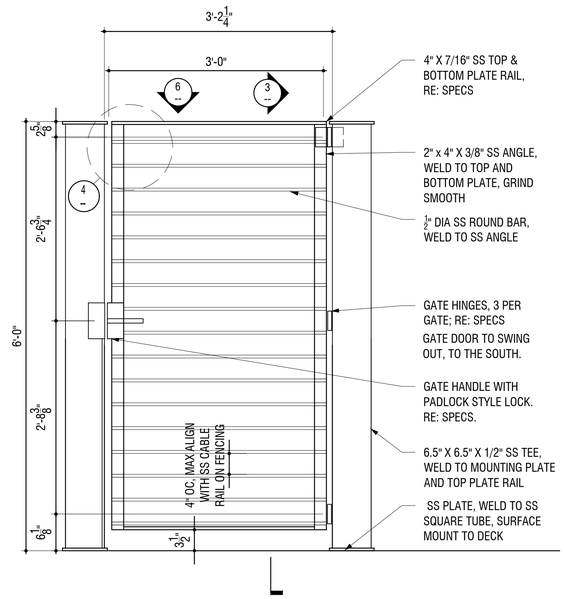

2 SOUTH GATE ELEVATION
SCALE: 1 1/2" = 1'

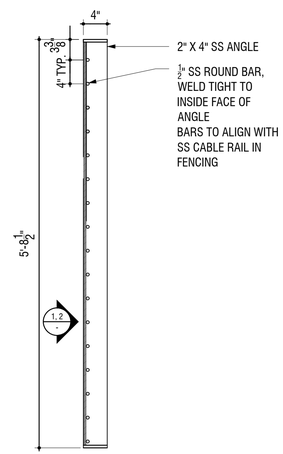

3 TYPICAL GATE SECTION
SCALE: 1 1/2" = 1'-0"

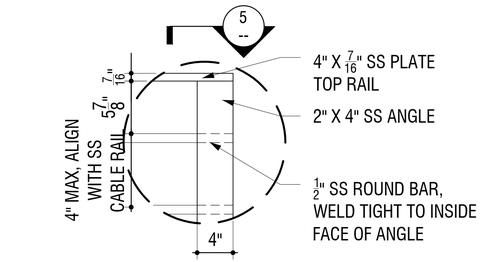

4 ELEVATION ENLARGMENT
SCALE: 1 1/2" = 1'

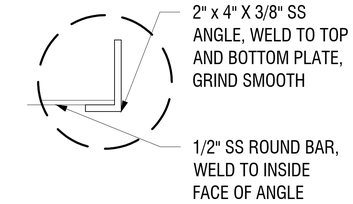

5 GATE ANGLE ENLARGEMENT
SCALE: 1 1/2" = 1'-0"

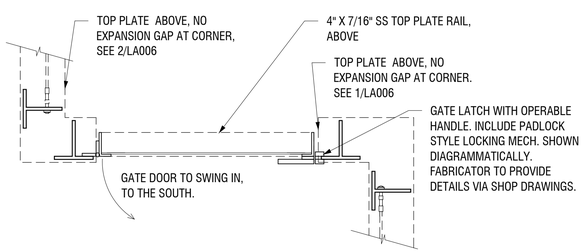

6 NORTH GATE PLAN VIEW DETAIL
SCALE: 1"=1'

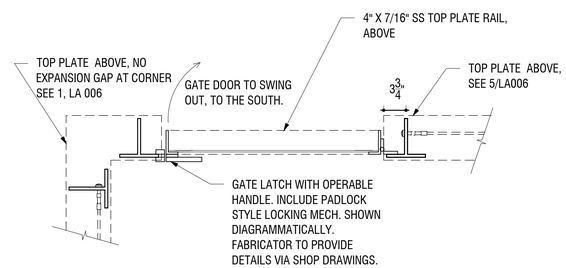

6 SOUTH GATE PLAN VIEW DETAIL
SCALE: 1"=1'

LICENSED LANDSCAPE ARCHITECT
MARK W. JOHNSON NO. 5513
STATE OF CALIFORNIA
Signature
06-27-2022
Date
06-27-2022
Date

CIVITAS

RECORD DRAWING REVIEWED BY: ENGINEER OF RECORD DATE:	NOTE: THIS DRAWING MAY BE A REDUCED SCALE PRINT OF THE ORIGINAL DRAWING. UTILIZE GRAPHIC SCALES TO VERIFY IF DRAWING IS A REDUCTION, AND ADJUST SCALES ACCORDINGLY TO THE GRAPHIC SCALES SHOWN.	SPEC NO. 2022-08 WBS NO. CP-0021-01 REFERENCES PROJECT ENGINEER CONTRACTOR CONSTRUCTION STARTED CONSTRUCTION COMPLETED COST INSPECTOR	REVISIONS	DATE / APPROVED	PORT of SAN DIEGO Waterfront of Opportunity	DESIGNED K HOPKINS DRAWN K HOPKINS CHECKED S JORDAN	APPROVAL RECOMMENDED DISTRICT PROJECT MANAGER APPROVED Chris Brooke 8/10/22 DISTRICT MANAGER-DESIGN	IMPERIAL BEACH PIER ENHANCEMENTS - PHASE 2 CABLE FENCE GATE DETAILS	DATE AUGUST, 9, 2022 A/E NO. LA007 SHEET 21 OF 30 DRAWING NO. IB-2022-01 REV. -

ADDITIVE BID ITEM NO. 1

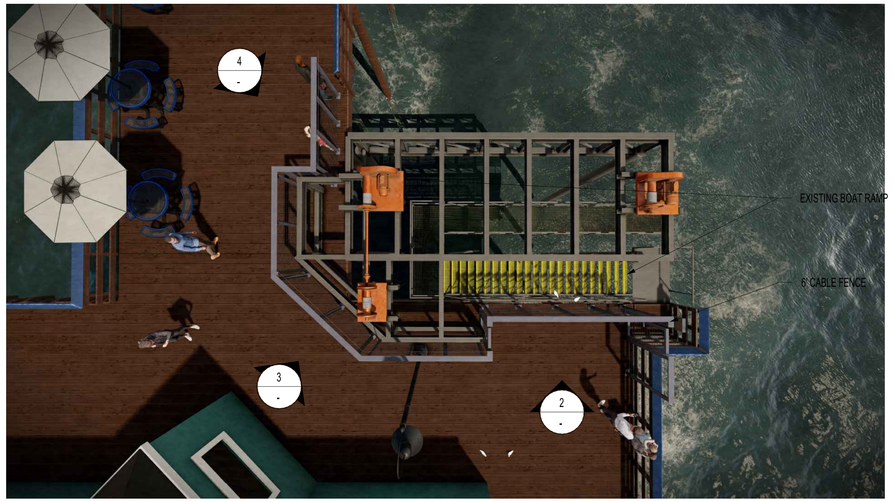

1 CABLE FENCE AERIAL VIEW
SCALE: NTS

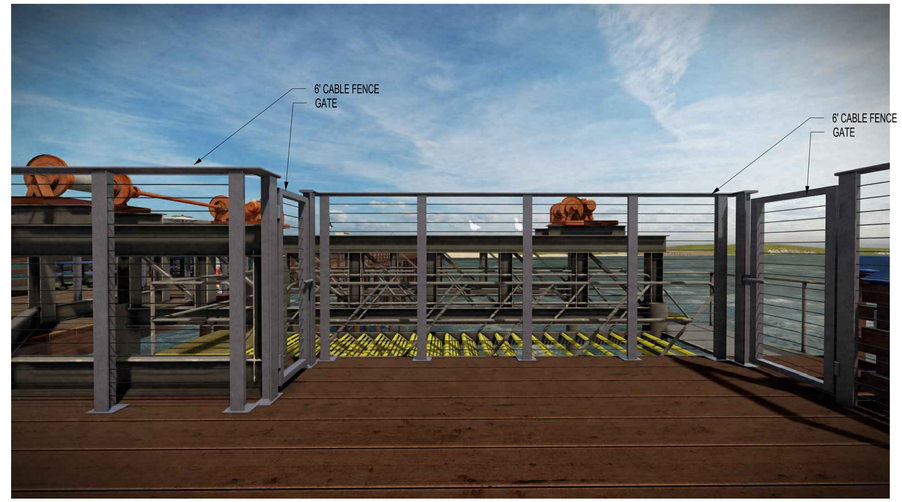

2 CABLE FENCE VIEW LOOKING EAST
SCALE: NTS

ILLUSTRATIONS ARE APPROXIMATE AND FOR REFERENCE PURPOSES ONLY

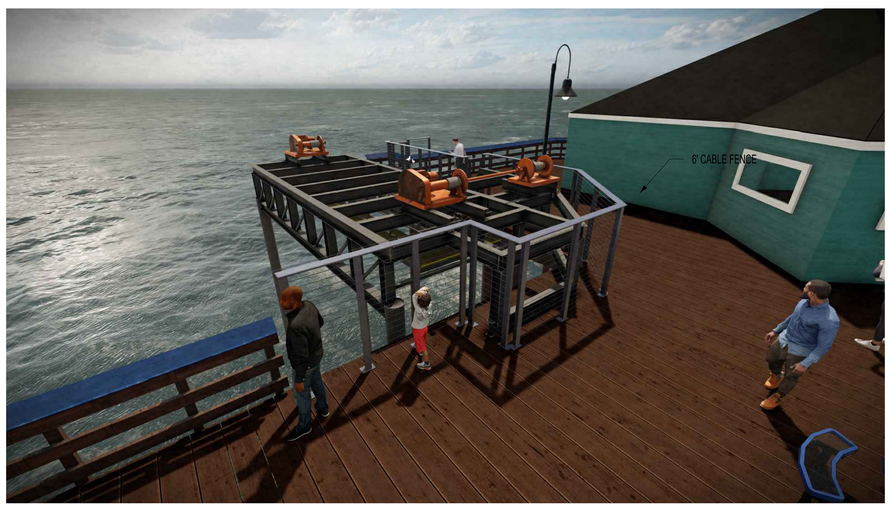

3 CABLE FENCE OBLIQUE VIEW
SCALE: NTS

4 CABLE FENCE VIEW LOOKING SOUTH EAST
SCALE: NTS

LICENSED LANDSCAPE ARCHITECT
MARK W. JOHNSON NO. 5513
STATE OF CALIFORNIA
Signature
06-27-2022
Stamped Date
Expiration Date

CIVITAS

RECORD DRAWING
REVIEWED BY:
ENGINEER OF RECORD
DATE:

NOTE:
THIS DRAWING MAY BE A REDUCED SCALE PRINT OF THE ORIGINAL DRAWING. UTILIZE GRAPHIC SCALES TO VERIFY IF DRAWING IS A REDUCTION, AND ADJUST SCALES ACCORDINGLY TO THE GRAPHIC SCALES SHOWN.

SPEC NO. 2022-08	WBS NO. CP-0021-01
REFERENCES	
PROJECT ENGINEER	
CONTRACTOR	
CONSTRUCTION STARTED	
CONSTRUCTION COMPLETED	
COST	INSPECTOR

REVISIONS | DATE / APPROVED

PORT of SAN DIEGO
Waterfront of Opportunity

DESIGNED K HOPKINS
DRAWN K HOPKINS
CHECKED S JORDAN

APPROVAL RECOMMENDED
DISTRICT PROJECT MANAGER
APPROVED Chris Brooks 8/10/22
DISTRICT MANAGER–DESIGN

IMPERIAL BEACH PIER
ENHANCEMENTS - PHASE 2
CABLE FENCE VIEWS

DATE AUGUST, 9, 2022
A/E NO. LA008
SHEET 22 OF 30
DRAWING NO. IB-2022-01
REV. -

ELECTRICAL GENERAL NOTES

1. THE FOLLOWING GENERAL NOTES APPLY TO ALL ELECTRICAL DRAWINGS.

2. THE CONTRACTOR'S BID AND ALL WORK SHALL COMPLY WITH THE 2019 EDITION OF THE CALIFORNIA ELECTRICAL CODE AND ALL OTHER APPLICABLE FEDERAL, STATE, AND LOCAL CODES. WHERE THE PLANS SHOWN MORE RESTRICTIVE REQUIREMENTS, THE PLANS SHALL GOVERN. HOWEVER, NOTHING ON THESE PLANS SHALL BE INTERPRETED AS AUTHORITY TO VIOLATE ANY CODE OR REGULATION. WHEN REFERENCES ARE MADE TO SPECIFIC CODE SECTIONS, STANDARDS, GUIDES, AND OTHER SIMILAR REFERENCES, THEY ARE INTENDED TO ADD EMPHASIS TO THE REQUIREMENTS OF THAT PARTICULAR REFERENCE AND ARE NOT INTENDED IN ANY WAY TO RELIEVE THE CONTRACTOR OF THE REMAINING REFERENCES.

3. THE CONTRACTOR SHALL VISIT THE SITE INCLUDING ALL AREAS INDICATED ON THE DRAWINGS. THE CONTRACTOR SHALL THOROUGHLY FAMILIARIZE THEMSELVES WITH THE EXISTING CONDITIONS AND BY SUBMITTING A BID ACCEPTS CONDITIONS UNDER WHICH THEY SHALL BE REQUIRED TO PERFORM THEIR WORK.

4. IT SHALL BE THE ELECTRICAL CONTRACTOR'S RESPONSIBILITY TO OBTAIN A COMPLETE SET OF DRAWINGS AND SPECIFICATIONS. THEY SHALL CHECK THE DRAWINGS OF THE OTHER TRADES AND SHALL CAREFULLY READ THE ENTIRE SPECIFICATIONS AND DETERMINE THEIR RESPONSIBILITIES. FAILURE TO DO SO SHALL NOT RELEASE THE CONTRACTOR FROM DOING THE WORK IN COMPLETE ACCORDANCE WITH THE DRAWINGS AND SPECIFICATIONS.

5. THE CONTRACTOR SHALL COORDINATE THEIR WORK WITH OTHER TRADES AT THE SITE. ANY COST TO ROUTE CONDUIT OTHER THAN AS SHOWN ON THE PLANS SHALL BE INCURRED BY THE CONTRACTOR.

6. WHEREVER A DISCREPANCY IN QUANTITY OR SIZE OF CONDUIT, WIRE, EQUIPMENT DEVICES, CIRCUIT BREAKERS, TRANSFORMERS, GROUND FAULT PROTECTION SYSTEM, ETC. (ALL MATERIALS, ARISES ON THE DRAWINGS AND/OR SPECIFICATIONS), THE CONTRACTOR SHALL BE RESPONSIBLE FOR PROVIDING AND INSTALLING ALL MATERIALS AND SERVICES REQUIRED BY THE STRICTEST CONDITIONS NOTED ON DRAWINGS AND/OR IN THE SPECIFICATIONS TO ENSURE COMPLETE AND OPERABLE SYSTEMS AS REQUIRED BY THE OWNER OR ENGINEER.

7. THE ELECTRICAL DRAWINGS DO NOT SHOW ALL OFFSETS, BENDS, FITTINGS, JUNCTION BOXES, PULL BOXES, AND EXPANSION FITTINGS REQUIRED TO MEET FIELD CONDITIONS. DETERMINE ACTUAL MATERIAL AND HARDWARE REQUIREMENTS AND VERIFY ALL DIMENSIONS, EXISTING EQUIPMENT, AND STRUCTURAL MEMBER LOCATIONS BY FIELD INSPECTION.

8. SUBMIT SHOP DRAWINGS AND CATALOG CUTS FOR ALL MATERIALS AND EQUIPMENT IN ACCORDANCE WITH THE SPECIFICATIONS.

9. PROVIDE A SET OF AS-BUILT DRAWINGS SHOWING THE LOCATIONS OF ALL UNDERGROUND CONDUITS AND INDICATE ALL CHANGES MADE DURING CONSTRUCTION AND ANY DEVIATIONS FROM THE ELECTRICAL DRAWINGS, IN ACCORDANCE WITH THE SPECIFICATIONS.

10. ALL MATERIALS AND EQUIPMENT SHALL BE UL LISTED AND LABELED AND SHALL BE INSTALLED IN THE MANNER FOR WHICH THEY ARE DESIGNED AND APPROVED.

11. ALL CIRCUIT BREAKERS, FUSES, AND ELECTRICAL EQUIPMENT SHALL HAVE INTERRUPTING RATING NOT LESS THAN THE MAXIMUM SHORT CIRCUIT CURRENT, TO WHICH THEY MAY BE SUBJECTED.

12. UNLESS OTHERWISE NOTED, ALL DEVICES AND EQUIPMENT INSTALLED OUTSIDE OR IN DAMP LOCATIONS SHALL BE WEATHERPROOF WITH MARINE GRADE, CORROSION RESISTANT FINISH. THE FINISH FOR OUTDOOR, WEATHERPROOF, NEMA-3R ENCLOSURES SHALL HAVE ALL COVERS AND DOORS THOROUGHLY CLEANED USING A PHOSPHATE WASH. APPLY A ZINC RICH CORROSION RESISTANT PRIMER AND THEN A POLYESTER POWER COAT SUITABLE FOR MARINE ENVIRONMENT.

13. CONNECTIONS TO DEVICES SUBJECT TO VIBRATION, SUCH AS MOTORS, TRANSFORMERS, AND SENSORS, SHALL BE SHORT LENGTHS OF LIQUIDTIGHT FLEXIBLE STEEL CONDUIT, TERMINATED WITH APPROVED LIQUIDTIGHT METAL FITTINGS AND PROVIDED WITH A SEPARATE GROUND CONDUCTOR INSTALLED WITH THE PHASE CONDUCTORS.

14. UNLESS NOTED OTHERWISE, ALL WIRE SHALL BE COPPER, UL LISTED, RATED FOR 600 VOLTS, THE THHN/THWN-2 AND #12 AWG MINIMUM SIZE. CONDUCTORS LARGER THAN #10 AWG, SHALL BE STRANDED.

15. INSTALL ALL EQUIPMENT, LIGHTING FIXTURE, DEVICES, CONDUIT AND CONDUIT SUPPORTS TO MEET SEISMIC REQUIREMENTS.

16. CONDUIT RUNS SHOWN ARE DIAGRAMMATIC ONLY. INSTALL ALL CONDUITS AND FITTINGS TO SUIT FIELD CONDITIONS.

17. PROVIDE PROPERLY SIZED LUGS AT ALL CIRCUIT BREAKER PANELS, FOR THE CONDUCTORS SHOWN TO CONNECT TO THESE LUGS.

18. SEPARATE INSULATED EQUIPMENT GROUNDING CONDUCTOR, SIZED PER NEC 250.122, SHALL BE PROVIDED, INSTALLED IN THE SAME CONDUIT AS THE CIRCUIT CONDUCTORS, FOR ALL FEEDER AND BRANCH CIRCUITS.

19. PROVIDE LAMINATED TYPE WRITTEN DIRECTORY CARD IN EACH PANEL AND SAFETY SWITCH. IDENTIFY LOAD SERVED BY EACH CIRCUIT BREAKER. PROVIDE LAMINATED PLASTIC NAMEPLATES TO IDENTIFY ALL LOADS SERVED BY EQUIPMENT. IN ADDITION TO CODE REQUIRED NAMEPLATES, CONTRACTOR SHALL PROVIDE PORT OF SAN DIEGO IDENTIFYING NAMEPLATE INFORMATION, WHICH IS PRINTED ON AN APPROPRIATE SURFACE, AND SHALL INSTALL INSIDE THE SWITCHBOARD/PANELBOARD WITH THE FOLLOWING INFORMATION:

   PANEL xxxx (NAME OF PANELBOARD)
   MAIN CIRCUIT OR LUGS ONLY BUS RATING
   VOLTAGE
   FED BY SOURCE
   DATE

20. INSTALL ALL CONDUITS AND WIRES WITH A MINIMUM NUMBER OF BENDS AND IN SUCH A MANNER AS TO CONFORM TO THE STRUCTURE, AVOID OBSTRUCTIONS, PRESERVE HEAD ROOM, AND KEEP OPENINGS AND PASSAGEWAYS CLEAR, AND MEET ALL STRUCTURAL CODE REQUIREMENTS.

21. DO NOT BORE, NOTCH, OR IN ANY WAY CUT INTO ANY STRUCTURAL MEMBER WITHOUT WRITTEN APPROVAL FROM THE ENGINEER.

22. IF EQUIPMENT SUBSTITUTIONS ARE MADE BY THE CONTRACTOR, THE CONTRACTOR SHALL BE RESPONSIBLE FOR HAVING A CONCRETE PAD DESIGNED FOR THAT EQUIPMENT BY A STRUCTURAL ENGINEER LICENSED IN THE STATE OF CALIFORNIA.

23. INTERRUPTION OF EXISTING ELECTRIC SERVICE: DO NOT INTERRUPT ELECTRIC SERVICE TO FACILITIES OCCUPIED BY OWNER OR OTHERS UNLESS PERMITTED UNDER THE FOLLOWING CONDITIONS:
   A. NOTIFY OWNER NO FEWER THAN SEVEN (7) DAYS IN ADVANCE OF PROPOSED INTERRUPTION OF ELECTRIC SERVICE.
   B. PROVIDE SCHEDULE OF DOWN TIME (SHUT DOWN PLAN).
   C. DISTRICT WILL NOT BE RESPONSIBLE FOR PROVIDING TEMPORARY POWER FOR CONSTRUCTION PURPOSES.

24. SPLICING SHALL ONLY TAKE PLACE WITHIN A JUNCTION BOX AND WITH A SCOTCHCAST EPOXY SEAL KIT.

DISCONNECT AND OVERCURRENT DEVICES

CIRCUIT BREAKER		SAFETY SWITCHES	
NUMBERS OF POLES	3	NUMBERS OF POLES	3
TRIP (AMPERES)	*	FUSE SIZE (AMPS)	*
FRAME (AMPERES)	100	RATING (AMPERES)	100
I.C. (1000 AMPS)	10	FUSE CLASS (UL)	RK5

* "NA" INDICATES NON-AUTOMATIC C/B
* "NF" INDICATES NON-FUSED SWITCH
* "50" INDICATES TRIP OR FUSE SIZE
* "**" INDICATES FUSE SIZE PER MANUFACTURER'S RECOMMENDATION

ELECTRICAL SYMBOLS

GENERAL SYMBOLS

- DASHED SYMBOL INDICATES EXISTING FIXTURE, DEVICE, OUTLET OR EQUIPMENT TO REMAIN.
- SOLID SYMBOL INDICATES NEW FIXTURE, DEVICE, OUTLET.
- DASHED SYMBOL WITH HATCH INDICATES FIXTURE, DEVICE, OUTLET OR EQUIPMENT TO BE DEMOLISHED.
- R R R — SYMBOL WITH "R" INDICATES RELOCATE(D) FIXTURE, DEVICE, OUTLET.
- XE — CONDUIT OR WIRING EXISTING TO REMAIN.
- # — KEY NOTE REFERENCE
- 42,000 — SHORT CIRCUIT CURRENT, AMPS
- A / 3 4 — DETAIL/SECTION DESIGNATION; SHEET WHERE DETAIL SECTION OR DETAIL IS SHOWN; SHEET WHERE SECTION OR DETAIL IS USED
- A / E1 — PHOTO NUMBER DESIGNATION; SHEET PHOTO ON
- 3/E39 — DETAIL OR SECTION REFERENCES IN NOTES

BUILDING WIRING & RACEWAY SYSTEMS

- WIRING OR CONDUIT EXPOSED
- WIRING OR CONDUIT CONCEALED IN-DECK
- SURFACE FLUSH — PANELBOARD.
- GROUNDING ELECTRODE
- G — GROUND BAR.
- CB — ENCLOSED CIRCUIT BREAKER.

SINGLE LINE DIAGRAM

- LOW VOLTAGE CIRCUIT BREAKER.
- SPLICE
- SPECIAL RECEPTACLE OUTLET WITH NEMA CONFIGURATION NUMBER AS NOTED.
- PANEL XXXX — PANELBOARD.
- TRANSFORMER – SINGLE LINE DIAGRAM
- CT; CURRENT TRANSFORMER BY SDG&E. NUMBER INDICATES QUANITY.
- △ — 3-PHASE, 3-WIRE DELTA CONNECTION.
- Y — 3-PHASE, 4-WIRE WYE CONNECTION (UNGROUNDED NEUTRAL)
- M — KILOWATT HOUR METER

LUMINAIRES

SUBSCRIPT ADJACENT TO LIGHTING LUMINAIRE INDICATE:
1,2,3 etc. = CIRCUIT NUMBERS
a,b,c etc. = SWITCH IDENTIFICATION
NL = NIGHT/SECURITY LIGHT

- # — LUMINAIRE SCHEDULE REFERENCE
- LED LUMINAIRE, SURFACE MOUNTED UNDER CANOPY AND HANDRAIL.

ELECTRICAL ABBREVIATIONS

A OR AMP	AMPERE
AIC	AMPS INTERRUPTING CAPACITY
C	CONDUIT
C/B	CIRCUIT BREAKER
CKT	CIRCUIT
CU	COPPER
E	ELECTRICAL CONDUIT
(E)	EXISTING
G	GROUND
GFI	GROUND FAULT INTERRUPTER
HP	HORSEPOWER
HZ	HERTZ
J-BOX OR JB	JUNCTION BOX
KAIC	THOUSAND AMPS INTERRUPTING CAPACITY
KVA	KILOVOLT AMP
KV	KILOVOLT
KW	KILOWATT
LED	LIGHT-EMITTING DIODE
LFMC	LIQUID TIGHT FLEXIBLE METAL CONDUIT
M	MOTOR
MAX	MAXIMUM
MSB	MAIN SWITCHBOARD
(N)	NEW
N/A	NOT APPLICABLE
NEMA	NATIONAL ELECTRICAL MANUFACTURER ASSOCIATION
P	POLE
POC	POINT OF CONNECTION
POD	POINT OF DISCONNECTION
PH	RED, GREEN, BLUE
RGB	PHASE
SCH	SCHEDULE
TBD	TO BE DETERMINED
TYP.	TYPICAL
UL	UNDERWRITERS LABORATORY
UON	UNLESS OTHERWISE NOTED
V	VOLT
VA	VOLT AMPERE
W	WATT OR WIRE
X OR EXIST.	EXISTING (EQUIPMENT)

SHEET LIST TABLE

SHEET NUMBER	SHEET TITLE
E-001	ELECTRICAL LEGENDS, GENERAL NOTES
E-002	LUMINAIRE SCHEDULE
E-003	TITLE 24 LIGHTING COMPLIANCE FORMS-1
E-004	TITLE 24 LIGHTING COMPLIANCE FORMS-2
E-101	ELECTRICAL SITE PLAN
E-201	ENLARGED PLANS
E-501	ELECTRICAL DETAILS
E-601	SINGLE LINE DIAGRAM

BSE ENGINEERING, INC.
9903 BUSINESS PARK AVE, SUITE 104
SAN DIEGO, CA 92131
TEL: 858.800.6000
FAX: 858.800.6001
BSE PROJECT NO. 22-217-1023

REGISTERED PROFESSIONAL ENGINEER — ALAN J. BROWN — No. 13353 — EXP. 09-30-22 — ELECTRICAL — STATE OF CALIFORNIA

RECORD DRAWING
REVIEWED BY:
PROJECT-MANAGER/ENGINEER
DATE

NOTE: THIS DRAWING MAY BE A REDUCED SCALE PRINT OF THE ORIGINAL DRAWING. UTILIZE GRAPHIC SCALES TO VERIFY IF DRAWING IS A REDUCTION, AND ADJUST SCALES ACCORDINGLY TO THE GRAPHIC SCALES SHOWN.

SPEC NO. 2022-07 WBS NO. EC-0008-01
REFERENCES -
PROJECT ENGINEER -
CONTRACTOR -
CONSTRUCTION STARTED -
CONSTRUCTION COMPLETED -
COST - INSPECTOR -

REVISIONS | DATE / APPROVED

PORT of SAN DIEGO — Waterfront of Opportunity

DESIGNED A. BROWN
DRAWN J. CARNAHAN
CHECKED B. WOUTERS

APPROVAL RECOMMENDED
X. XXXX — PROJECT MANAGER
APPROVED Chris Brooke 8/10/22
X. XXXX — ENGINEERING/CONSTRUCTION DEPARTMENT MANAGER

SAN DIEGO UNIFIED PORT DISTRICT

IMPERIAL BEACH PIER ENHANCEMENTS - PHASE 2

ELECTRICAL LEGENDS, GENERAL NOTES

DATE JUNE 27, 2022
A/E NO. E-001
SHEET 23 OF 30
DRAWING NO. IB-2022-01
REV. -

LUMINAIRE SCHEDULE

CALLOUT	SYMBOL	LAMP	DESCRIPTION	MOUNTING	MODEL	INPUT WATTS	VOLTS
A		LED RGB	FLEXIBLE LED STRIP, COLOR-CHANGING IP-67/IP-68 RATED. BENDS AROUND CONTOURS AND TIGHT CURVES. UL LISTED FOR WET LOCATIONS. DIMMABLE THROUGH DMX CONTROLLER. 120 DEGREE (DOME) BEAM ANGLE. REFER TO DRAWINGS FOR FIXTURE LENGTH.	SURFACE	CORE LIGHTING: LNT-45-D-RGBW27-24V-IP67EF-HW3 (OR APPROVED EQUAL) DRIVER: PSHK-150W-24V-UNV (OR APPROVED EQUAL) CONTROLLER: RGB-DMX-4C-RJ45 (OR APPROVED EQUAL)	4.4	120V 1P 2W
B		LED 2700K	LED STRIP LIGHT MOUNTED TO UNDERSIDE OF WOOD HANDRAIL. IP67 RATED AND UL LISTED FOR WET LOCATIONS. CLEAR LENS AND EXTRUDED ALUMINUM HOUSING. HOUSING DIMENSIONS 0.47" H X 0.36" W. REFER TO DRAWINGS FOR FIXTURE LENGTH.	SURFACE	CALIFORNIA ACCENT LIGHTING: LLED8000-STL-CL-3.6-10V-2.7K-IP67 (OR APPROVED EQUAL) DRIVER: DRV-E SERIES (OR APPROVED EQUAL)	3.6	120V 1P 2W

1 LUMINAIRE SCHEDULE
SCALE: NO SCALE

BSE Engineering, Inc.
9903 Business Park Ave, Suite 104
San Diego, CA 92131
TEL: 858.800.6000
FAX: 858.800.6001
BSE PROJECT NO. 22-217-1023

REGISTERED PROFESSIONAL ENGINEER
ALAN J. BROWN
No. 13353
Exp. 09-30-22
ELECTRICAL
STATE OF CALIFORNIA

RECORD DRAWING
REVIEWED BY:
PROJECT-MANAGER/ENGINEER
DATE

NOTE:
THIS DRAWING MAY BE A REDUCED SCALE PRINT OF THE ORIGINAL DRAWING. UTILIZE GRAPHIC SCALES TO VERIFY IF DRAWING IS A REDUCTION, AND ADJUST SCALES ACCORDINGLY TO THE GRAPHIC SCALES SHOWN.

SPEC NO. 2022-07 WBS NO. EC-0008-01
REFERENCES -
PROJECT ENGINEER -
CONTRACTOR -
CONSTRUCTION STARTED -
CONSTRUCTION COMPLETED -
COST - INSPECTOR -

REVISIONS | DATE / APPROVED

PORT of SAN DIEGO
Waterfront of Opportunity

DESIGNED A. BROWN
DRAWN J. CARNAHAN
CHECKED B. WOUTERS

APPROVAL RECOMMENDED
X. XXXX
PROJECT MANAGER
APPROVED
Chris Brooke 8/10/22
X. XXXX
ENGINEERING/CONSTRUCTION DEPARTMENT MANAGER

SAN DIEGO UNIFIED PORT DISTRICT
IMPERIAL BEACH PIER ENHANCEMENTS - PHASE 2
LUMINAIRE SCHEDULE

DATE JUNE 27, 2022
A/E NO. E-002
SHEET 24 OF 30
DRAWING NO. IB-2022-01
REV. -

STATE OF CALIFORNIA
Outdoor Lighting
NRCC-LTO-E — CALIFORNIA ENERGY COMMISSION

CERTIFICATE OF COMPLIANCE			**NRCC-LTO-E**
Project Name:		**Report Page:**	**(Page 1 of 8)**
Project Address:		**Date Prepared:**	6/6/2022

A. GENERAL INFORMATION

01	Project Location (city)		04	Total Illuminated Hardscape Area (ft^2)	665
02	Climate Zone	7			
03	Outdoor Lighting Zone per Title 24 Part 1 §10.114 or as designated by Authority Having Jurisdiction (AHJ):				
☐ LZ-0: Very Low - Undeveloped Parkland	☐ LZ-2: Moderate - Rural Areas	☐ LZ-4: High - Must be reviewed by CA Energy Commission for Approval			
☐ LZ-1: Low - Developed Parkland	☒ LZ-3: Moderately High - Urban Areas				

B. PROJECT SCOPE

This table includes outdoor lighting systems that are within the scope of the permit application and are demonstrating compliance using the prescriptive path outlined in §140.7 or §141.0(b)2L for alterations.

My Project Consists of:

01	02
☐ New Lighting System	Must Comply with Allowances from §140.7
☒ Altered Lighting System	Is your alteration increasing the connected lighting load (Watts)? ● Yes ○ No

03	04	05
% of Existing Luminaires Being Altered[1]	Sum Total of Luminaires Being Added or Altered	Calculation Method
☐ < 10% ☐ >= 10% and < 50% ☐ >= 50%		

Please proceed to Table F. Outdoor Lighting Fixture Schedule to define the project's luminaires.

[1] FOOTNOTES: % of Existing Luminaires Being Altered = (Sum Total of Luminaires Being Added or Altered / Existing Luminaires within the Scope of the Permit Application) x 100.

STATE OF CALIFORNIA
Outdoor Lighting
NRCC-LTO-E — CALIFORNIA ENERGY COMMISSION

CERTIFICATE OF COMPLIANCE			**NRCC-LTO-E**
Project Name:		**Report Page:**	**(Page 2 of 8)**
Project Address:		**Date Prepared:**	6/6/2022

C. COMPLIANCE RESULTS

Results in this table are automatically calculated from data input and calculations in Tables F through I. Note: If any cell on this table says "COMPLIES with Exceptional Conditions" refer to Table D. Exceptional Conditions for guidance or see applicable Table referenced below.

Calculations of Total Allowed Lighting Power (Watts) §140.7 or §141.0(b)2L												Compliance Results		
01		02		03		04		05		06		07		08	09
General Hardscape Allowance §140.7(d)1 (See Table I)	+	Per Application §140.7(d)2 (See Table J)	+	Sales Frontage §140.7(d)2 (See Table K)	+	Ornamental §140.7(d)2 (See Table L)	+	Per Specific Area §140.7(d)2 (See Table M)	OR	Existing Power Allowance §141.0(b)2L (See Table N)	=	**Total Allowed** (Watts)	≥	**Total Actual** (Watts)	**07 must be >= 08**
391.63	+	---	+	---	+	---	+	108	OR	---	=	499.63	≥	411.2	COMPLIES
Cutoff Compliance (See Table G for Details)															N/A
Controls Compliance (See Table H for Details)															COMPLIES with Exceptional Conditions

D. EXCEPTIONAL CONDITIONS

This table is auto-filled with uneditable comments because of selections made or data entered in tables throughout the form.

E. ADDITIONAL REMARKS

This table includes remarks made by the permit applicant to the Authority Having Jurisdiction.

STATE OF CALIFORNIA
Outdoor Lighting
NRCC-LTO-E — CALIFORNIA ENERGY COMMISSION

CERTIFICATE OF COMPLIANCE			**NRCC-LTO-E**
Project Name:		**Report Page:**	**(Page 3 of 8)**
Project Address:		**Date Prepared:**	6/6/2022

F. OUTDOOR LIGHTING FIXTURE SCHEDULE

For new or altered lighting systems demonstrating compliance with §140.7 all new luminaires being installed and any existing luminaires remaining or being moved within the spaces covered by the permit application are included in the Table below. For altered lighting systems using the Existing Power method per §141.0(b)2L only new luminaires being installed and replacement luminaires being installed as part of the project scope are included (ie, existing luminaires remaining or existing luminaires being moved are not included).

Designed Wattage:

01	02		03	04	05	06	07	08	09	10	
Name or Item Tag	Complete Luminaire Description		Watts per luminaire[1, 2]	How is Wattage determined	Total number luminaires[2]	Luminaire Status[3]	Excluded per §140.7(a)	Design Watts	Cutoff Req. > 6,200 initial lumen output §130.2(b)[4]	Field Inspector	
										Pass	Fail
A	TYPE A - 4.4W LED STRIP LIGHT	☐ Linear	4.4	CEC Default	46	New	☐	202.4	NA: < 6200 lumens	☐	☐
B	TYPE B - 3.6W LED STRIP LIGHT	☐ Linear	3.6	CEC Default	58	New	☐	208.8	NA: < 6200 lumens	☐	☐
							Total Design Watts:	411.2			

** NOTES: Selections with a * require a note in the space below explaining how compliance is achieved.*
EX: Luminaire is lighting a statue; EXCEPTION 2 to §130.2(b)

[1] FOOTNOTES: Authority Having Jurisdiction may ask for Luminaire cut sheets to confirm wattage used for compliance per §130.0(c)
[2] For linear luminaires, wattage should be indicated as W/lf instead of Watts/luminaire. Total linear feet should be indicated in column 05 instead of number of luminaires.
[3] Select "New" for new luminaires in a new outdoor lighting project, or for added luminaires in an alteration. Select "Altered" for replacement luminaires in an alteration. Select "Existing to Remain" for existing luminaires within the project scope that are not being altered and are remaining. Select "Existing Reinstalled" for existing luminaires which are being removed and reinstalled as part of the project scope.
[4] Compliance with mandatory cutoff requirements is required for luminaires with initial lumen output >= 6,200 unless exempted by §130.2(b)

G. CUTOFF REQUIREMENTS (BUG)

This section does not apply to this project.

STATE OF CALIFORNIA
Outdoor Lighting
NRCC-LTO-E — CALIFORNIA ENERGY COMMISSION

CERTIFICATE OF COMPLIANCE			**NRCC-LTO-E**
Project Name:		**Report Page:**	**(Page 4 of 8)**
Project Address:		**Date Prepared:**	6/6/2022

H. OUTDOOR LIGHTING CONTROLS

This table demonstrates compliance with controls requirements for all new or altered luminaires installed as part of the permit application. For alteration projects, luminaires which are existing to remain (ie untouched) and luminaires which are removed and reinstalled (wiring only) do not need to be included in this table even if they are within the spaces covered by the permit application.
*When an option having a * is selected, the notes section of this table must be completed. The lighting controls section of the Compliance Summary Table on the first page will show "DOES NOT COMPLY" if the notes are left blank.*

Mandatory Controls

01	02	03	04	05	
Area Description	Shut-Off §130.2(c)1	Auto-Schedule §130.2(c)2	Motion Sensor §130.2(c)3	Field Inspector	
				Pass	Fail
HANDRAIL LIGHTING	Photocontrol	Yes	Exempt*	☐	☐
CANOPY LIGHTING	Photocontrol	Yes	Exempt*	☐	☐

** NOTES: Controls with a * require a note in the space below explaining how compliance is achieved.*
EX: Not permitted by health & safety to be turned off; EXCEPTION 1 to §130.2(c)

HANDRAIL LIGHTING	EXCEPTION 2 to Section 130.2(c)3
CANOPY LIGHTING	EXCEPTION 2 to Section 130.2(c)3

STATE OF CALIFORNIA
Outdoor Lighting
NRCC-LTO-E — CALIFORNIA ENERGY COMMISSION

CERTIFICATE OF COMPLIANCE			**NRCC-LTO-E**
Project Name:		**Report Page:**	**(Page 5 of 8)**
Project Address:		**Date Prepared:**	6/6/2022

I. LIGHTING POWER ALLOWANCE (per §140.7)

This table includes areas using allowance calculations per §140.7. General Hardscape Allowance is per Table 140.7-A while "Use it or lose it" Allowances are per Table 140.7-B . Indicate which allowances are being used to expand sections for user input. Luminaires that qualify for one of the "Use it or lose it" allowances shall not qualify for another "Use it or lose it" allowance.

01				
☒ General Hardscape Allowance Table I (below)	"Use it or lose it" Allowance (select all that apply) (select all that apply)			
	☐ Per Application Table J	☐ Sales Frontage Table K	☐ Ornamental Table L	☒ Per Specific Area Table M

Calculated General Hardscape Lighting Power Allowance per Table 140.7-A (LZ 0, 1 & 4)
This section does not apply to this project.
Calculated General Hardscape Lighting Power Allowance per Table 140.7-A (LZ 2 & 3)

02	03	04	05	06	07	08	9	10
Area Description	Surface Type	Area Wattage Allowance (AWA)			Area Wattage Allowance (AWA)			Total General AWA + LWA (Watts)
		Illuminated Area (ft^2)	Allowed Density (W/ft^2)	Area Allowance (Watts)	Perimeter Length (lf)	Allowed Density (W/lf)	Linear Allowance (Watts)	
BEACH PIER	Asphalt	665	0.03	16.625	100	0.4	25	41.625
Initial Wattage Allowance for Entire Site (Watts):								350
Total General Hardscape Allowance (Watts):								391.625

J. LIGHTING ALLOWANCE: PER APPLICATION

This section does not apply to this project.

K. LIGHTING ALLOWANCE: SALES FRONTAGE

This section does not apply to this project.

L. LIGHTING ALLOWANCE: ORNAMENTAL

This section does not apply to this project.

STATE OF CALIFORNIA
Outdoor Lighting
NRCC-LTO-E — CALIFORNIA ENERGY COMMISSION

CERTIFICATE OF COMPLIANCE			**NRCC-LTO-E**
Project Name:		**Report Page:**	**(Page 6 of 8)**
Project Address:		**Date Prepared:**	6/6/2022

M. LIGHTING ALLOWANCE: PER SPECIFIC AREA

This table includes areas using the wattage allowance per specific area from Table 140.7-B . More than one specific area allowance may be taken in a single project, if applicable. However, multiple specific area allowances may not be taken for the exact same area on the site.

01	02	03	04	05	06	07	08	09	10
Area Description	Specific Area Type per Table 140.7-B	CALCULATED ALLOWANCE (Watts)			DESIGN WATTS				Additional Allowance (Watts)
		Specific Area (ft^2)[1]	Allowed Density (W/ft^2)	Extra Allowance (Watts)	Luminaire Name or Item Tag	Watts per Luminaire	# of Luminaires	Design Watts	
CANOPY	NonSalesCanopy	400	0.27	108	A	4.4	46	202.4	108
Total Design Watts for this Area:								202.4	
Total Allowance (Watts) All Areas:									108

[1] FOOTNOTES: See Table 140.7-B for rules for calculating the specific areas (ft^2 for these additional lighting allowances.
[2] For luminaires indicated in Table F as linear, wattage in column 07 is W/lf instead of Watts/luminaire. Total linear feet should be indicated in column 08 instead of number of luminaires.

N. EXISTING CONDITIONS POWER ALLOWANCE (alterations only)

This section does not apply to this project.

O. DECLARATION OF REQUIRED CERTIFICATES OF INSTALLATION

Selections have been made based on information provided in this document. If any selection have been changed by permit applicant, an explanation should be included in Table E. Additional Remarks. These documents must be provided to the building inspector during construction and can be found online at https://www.energy.ca.gov/title24/2019standards/2019_compliance_documents/Nonresidential_Documents/NRCI/

Yes	No	Form/Title	Field Inspector	
			Pass	Fail
●	○	NRCI-LTO-01-E - Must be submitted for all buildings	☐	☐
●	○	NRCI-LTO-02-E- Must be submitted for a lighting control system, or for an Energy Management Control System (EMCS), to be recognized for compliance.	☐	☐

BSE ENGINEERING, INC.
9903 BUSINESS PARK AVE, SUITE 104
SAN DIEGO, CA 92131
TEL: 858.800.6000
FAX: 858.800.6001
BSE PROJECT NO. 22-217-1023

REGISTERED PROFESSIONAL ENGINEER — ALAN J. BROWN — No. 13353 — Exp. 09-30-22 — ELECTRICAL — STATE OF CALIFORNIA

RECORD DRAWING REVIEWED BY: PROJECT-MANAGER/ENGINEER DATE	NOTE: THIS DRAWING MAY BE A REDUCED SCALE PRINT OF THE ORIGINAL DRAWING. UTILIZE GRAPHIC SCALES TO VERIFY IF DRAWING IS A REDUCTION, AND ADJUST SCALES ACCORDINGLY TO THE GRAPHIC SCALES SHOWN.	SPEC NO. 2022-07 WBS NO. EC-0008-01 REFERENCES - PROJECT ENGINEER - CONTRACTOR - CONSTRUCTION STARTED - CONSTRUCTION COMPLETED - COST - INSPECTOR -	REVISIONS / DATE / APPROVED

PORT of SAN DIEGO — Waterfront of Opportunity

DESIGNED A. BROWN	APPROVAL RECOMMENDED X. XXXX PROJECT MANAGER	SAN DIEGO UNIFIED PORT DISTRICT
DRAWN J. CARNAHAN	APPROVED Chris Brooks 8/10/22 X. XXXX ENGINEERING/CONSTRUCTION DEPARTMENT MANAGER	IMPERIAL BEACH PIER ENHANCEMENTS - PHASE 2
CHECKED B. WOUTERS		TITLE 24 LIGHTING COMPLIANCE FORMS-1

DATE	JUNE 27, 2022
A/E NO.	E-003
SHEET	25 OF 30
DRAWING NO.	IB-2022-01
REV.	-

STATE OF CALIFORNIA
Outdoor Lighting
NRCC-LTO-E — CALIFORNIA ENERGY COMMISSION

CERTIFICATE OF COMPLIANCE		NRCC-LTO-E
Project Name:	Report Page:	(Page 7 of 8)
Project Address:	Date Prepared:	6/6/2022

P. DECLARATION OF REQUIRED CERTIFICATES OF ACCEPTANCE

Selections have been made based on information provided in this document. If any selection have been changed by permit applicant, an explanation should be included in Table E. Additional Remarks. These documents must be provided to the building inspector during construction and must be completed through an Acceptance Test Technician Certification Provider (ATTCP). For more information visit: http://www.energy.ca.gov/title24/attcp/providers.html

Yes	No	Form/Title	Field Inspector Pass	Field Inspector Fail
●	○	NRCA-LTO-02-A - Must be submitted for all outdoor lighting controls except for alterations where controls are added to <= 20 luminaires.	☐	☐

Registration Number: | Registration Date/Time: | Registration Provider: Energysoft

CA Building Energy Efficiency Standards - 2019 Nonresidential Compliance | Report Version: 2019.1.003 Schema Version: rev 20200601 | Report Generated: 2022-06-06 14:17:48

STATE OF CALIFORNIA
Outdoor Lighting
NRCC-LTO-E — CALIFORNIA ENERGY COMMISSION

CERTIFICATE OF COMPLIANCE		NRCC-LTO-E
Project Name:	Report Page:	(Page 8 of 8)
Project Address:	Date Prepared:	6/6/2022

DOCUMENTATION AUTHOR'S DECLARATION STATEMENT

I certify that this Certificate of Compliance documentation is accurate and complete.

Documentation Author Name:	Documentation Author Signature:
Company: BSE Engineering, Inc.	Signature Date: 2022-06-06
Address: 9903 Businesspark Ave. Suite 104	CEA/ HERS Certification Identification (if applicable):
City/State/Zip: San Diego CA 92131	Phone: 858-800-6000

RESPONSIBLE PERSON'S DECLARATION STATEMENT

I certify the following under penalty of perjury, under the laws of the State of California:

1. The information provided on this Certificate of Compliance is true and correct.
2. I am eligible under Division 3 of the Business and Professions Code to accept responsibility for the building design or system design identified on this Certificate of Compliance (responsible designer)
3. The energy features and performance specifications, materials, components, and manufactured devices for the building design or system design identified on this Certificate of Compliance conform to the requirements of Title 24, Part 1 and Part 6 of the California Code of Regulations.
4. The building design features or system design features identified on this Certificate of Compliance are consistent with the information provided on other applicable compliance documents, worksheets, calculations, plans and specifications submitted to the enforcement agency for approval with this building permit application.
5. I will ensure that a completed signed copy of this Certificate of Compliance shall be made available with the building permit(s) issued for the building, and made available to the enforcement agency for all applicable inspections. I understand that a completed signed copy of this Certificate of Compliance is required to be included with the documentation the builder provides to the building owner at occupancy.

Responsible Designer Name: Alan Brown	Responsible Designer Signature:
Company: BSE Engineering, Inc.	Date Signed: 2022-06-06
Address: 9903 Businesspark Ave. Suite 104	License: E13353
City/State/Zip: San Diego CA 92131	Phone: 858-800-6030

Registration Number: | Registration Date/Time: | Registration Provider: Energysoft

CA Building Energy Efficiency Standards - 2019 Nonresidential Compliance | Report Version: 2019.1.003 Schema Version: rev 20200601 | Report Generated: 2022-06-06 14:17:48

BSE Engineering, Inc.
9903 BUSINESS PARK AVE, SUITE 104
SAN DIEGO, CA 92131
TEL: 858.800.6000
FAX: 858.800.6001
BSE PROJECT NO. 22-217-1023

REGISTERED PROFESSIONAL ENGINEER ALAN J. BROWN No. 13353 Exp. 09-30-22 ELECTRICAL STATE OF CALIFORNIA

RECORD DRAWING
REVIEWED BY:
PROJECT-MANAGER/ENGINEER
DATE

NOTE: THIS DRAWING MAY BE A REDUCED SCALE PRINT OF THE ORIGINAL DRAWING. UTILIZE GRAPHIC SCALES TO VERIFY IF DRAWING IS A REDUCTION, AND ADJUST SCALES ACCORDINGLY TO THE GRAPHIC SCALES SHOWN.

SPEC NO. 2022-07 WBS NO. EC-0008-01
REFERENCES -
PROJECT ENGINEER -
CONTRACTOR -
CONSTRUCTION STARTED -
CONSTRUCTION COMPLETED -
COST - INSPECTOR -

REVISIONS | DATE / APPROVED

PORT of SAN DIEGO Waterfront of Opportunity

DESIGNED A. BROWN
DRAWN J. CARNAHAN
CHECKED B. WOUTERS

APPROVAL RECOMMENDED X. XXXX PROJECT MANAGER
APPROVED Chris Brooks 8/10/22 X. XXXX ENGINEERING/CONSTRUCTION DEPARTMENT MANAGER

SAN DIEGO UNIFIED PORT DISTRICT

IMPERIAL BEACH PIER ENHANCEMENTS - PHASE 2

TITLE 24 LIGHTING COMPLIANCE FORMS-2

DATE JUNE 27, 2022
A/E NO. E-004
SHEET 26 OF 30
DRAWING NO. IB-2022-01 REV. -

K:\Projects\Moffat & Nichol - 217\22-1023 IB Pier Enhancements\Dwgs\CAD v2018\Elec\22-217-1023-E-004.dwg / Jul 06, 2022 - 2:45pm / epotts

KEY NOTES

1. ROUTE 1"C PVC SCHEDULE 80 CONDUIT UNDERNEATH PIER DECKING BETWEEN LIFEGUARD STATION AND CANOPY LOCATION FOR THE FOLLOWING:
   - SHARK LIGHTING
   - CANOPY PERIMETER LIGHTING
   - HANDRAIL LIGHTING

   PROVIDE CONDUIT SUPPORTS AND HANGERS AS NEEDED.
2. ROUTE CONDUIT AND LUMINAIRE WIRING UP COLUMN TO ROOF OF CANOPY STRUCTURE. SEE DETAIL 1/E-201 FOR CANOPY LIGHTING PLAN.
3. ROUTE CONDUIT AND LUMINAIRE WIRING TO CONCEALED JUNCTION BOX FOR HANDRAIL LUMINAIRES.
4. PROVIDE 2#12, 1#12G, 3/4"C.
5. UTILIZE EXISTING PANEL INSIDE LIFEGUARD TOWER FOR NEW WORK.

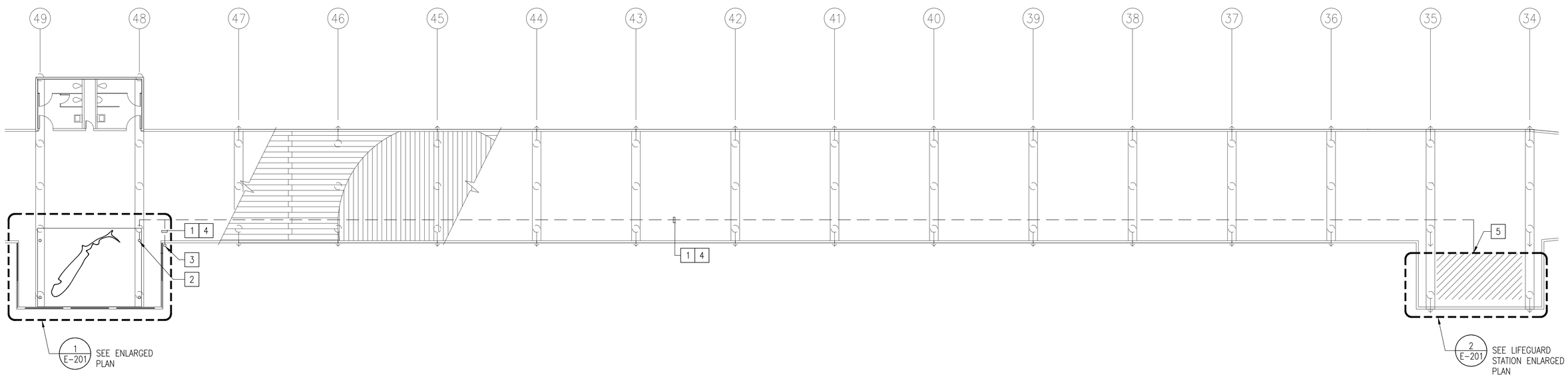

KEY PLAN
NOT TO SCALE

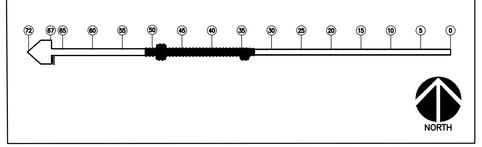

BSE ENGINEERING, INC.
9903 BUSINESS PARK AVE, SUITE 104
SAN DIEGO, CA 92131
TEL: 858.800.6000
FAX: 858.800.6001
BSE PROJECT NO. 22-217-1023

REGISTERED PROFESSIONAL ENGINEER ALAN J. BROWN No. 13353 Exp. 09-30-22 ELECTRICAL STATE OF CALIFORNIA

1 ELECTRICAL SITE PLAN
SCALE: 3/32" = 1'-0"

NORTH

0 2' 4' 6' 8' 10' 15' 25'
SCALE: 3/32"=1'-0"

RECORD DRAWING REVIEWED BY: PROJECT-MANAGER/ENGINEER DATE	NOTE: THIS DRAWING MAY BE A REDUCED SCALE PRINT OF THE ORIGINAL DRAWING. UTILIZE GRAPHIC SCALES TO VERIFY IF DRAWING IS A REDUCTION, AND ADJUST SCALES ACCORDINGLY TO THE GRAPHIC SCALES SHOWN.	SPEC NO. 2022-07 WBS NO. EC-0008-01 REFERENCES - PROJECT ENGINEER - CONTRACTOR - CONSTRUCTION STARTED - CONSTRUCTION COMPLETED - COST - INSPECTOR -	REVISIONS	DATE / APPROVED	PORT of SAN DIEGO Waterfront of Opportunity	DESIGNED A. BROWN DRAWN J. CARNAHAN CHECKED B. WOUTERS	APPROVAL RECOMMENDED X. XXXX PROJECT MANAGER APPROVED Chris Brooke 8/10/22 X. XXXX ENGINEERING/CONSTRUCTION DEPARTMENT MANAGER	SAN DIEGO UNIFIED PORT DISTRICT IMPERIAL BEACH PIER ENHANCEMENTS - PHASE 2 ELECTRICAL SITE PLAN	DATE JUNE 27, 2022 A/E NO. E-101 SHEET 27 OF 30 DRAWING NO. IB-2022-01 REV. -

KEY NOTES

1. PROVIDE CONTINUOUS RUN OF TYPE A LUMINAIRES TO BE MOUNTED IN BETWEEN DROP DOWN SHARK ACCENT PIECE AND CANOPY. MOUNTING SHALL FOLLOW THE SHAPE OF THE SHARK. PROVIDE JUNCTION BOXES, DRIVERS, AND ANY OTHER LIGHTING ACCESSORIES CONCEALED ABOVE THE CANOPY WITHOUT CROSSING OVER THE CANOPY DESIGN OPENINGS. REFER TO LUMINAIRE SCHEDULE ON SHEET E-002 FOR ADDITIONAL FIXTURE INFORMATION.
2. PROVIDE CONTINUOUS RUN OF TYPE B LUMINAIRE ON THE UNDERSIDE OF THE HANDRAIL. REFER TO 3/E-501 AND 4/E-501 FOR MOUNTING. PROVIDE STAINLESS STEEL JUNCTION BOXES, DRIVERS, AND ANY OTHER LIGHTING ACCESSORIES CONCEALED ALONG THE UNDERSIDE OF THE HANDRAIL. REFER TO LUMINAIRE SCHEDULE ON SHEET E-002 FOR ADDITIONAL FIXTURE INFORMATION.
3. PROVIDE REMOTE DRIVER IN STAINLESS STEEL WEATHERPROOF ENCLOSURE WITH WATER-TIGHT FITTINGS.
4. PROVIDE PVC COATED FLEXIBLE CONDUIT FOR CONNECTIONS.
5. ROUTE CONDUIT ABOVE THE CANOPY WITHOUT CROSSING OVER THE CANOPY DESIGN OPENINGS.
6. PROVIDE 2#10, 1#10G, 3/4"C.
7. FEED TRAVELING UP THE POLE FROM LIFEGUARD STATION.
8. PROVIDE 120V POWER TO DMX CONTROLLER RGB-SDE3 FOR TYPE A LUMINAIRES IN LOCKABLE ENCLOSURE. CONTROLLER SHALL HAVE SCENE PROGRAM CAPABILITY. REFER TO DETAIL 2/E-501 FOR WIRING DIAGRAM.
9. PROVIDE TIME CLOCK FOR TYPE B LUMINAIRES. REFER TO DETAIL 1/E-501 FOR WIRING DIAGRAM.

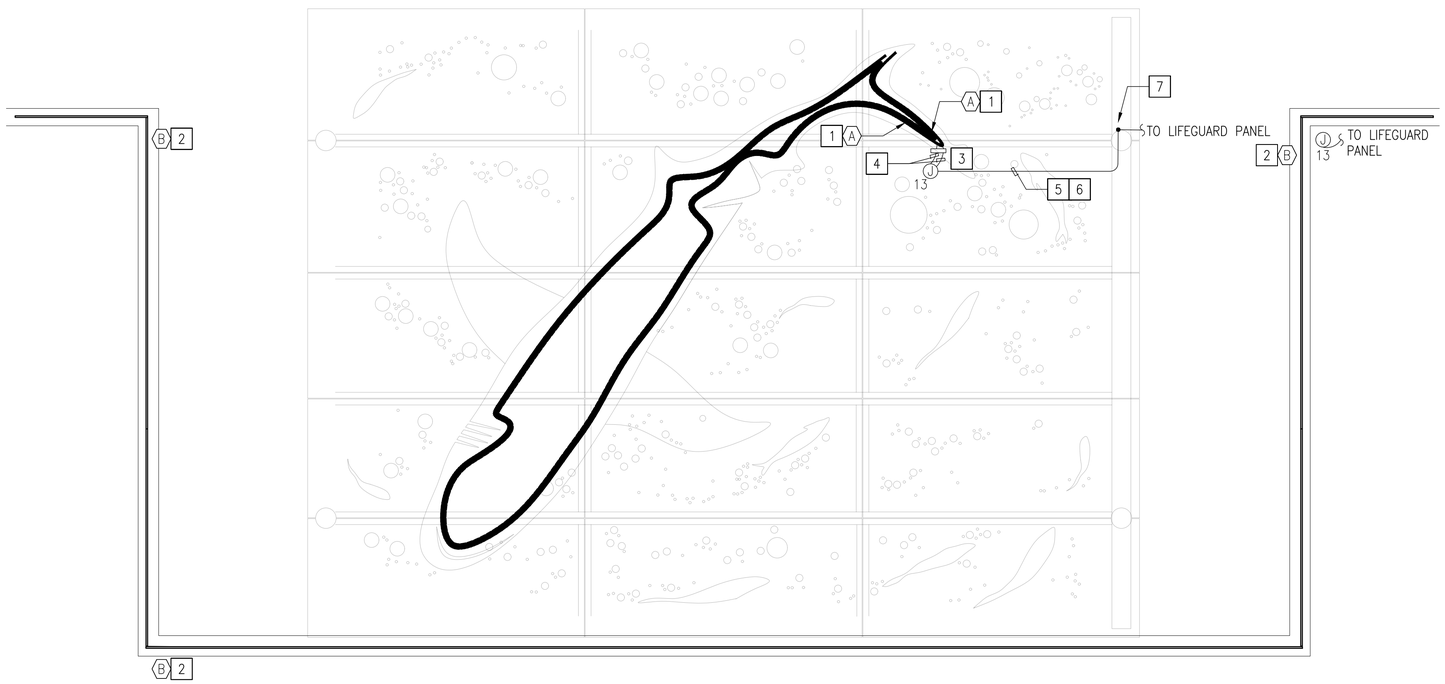

1 ENLARGED PLANS
SCALE: 1/2" = 1'-0"

NORTH

0 1/2' 1' 2' 4'
SCALE: 1/2"=1'-0"

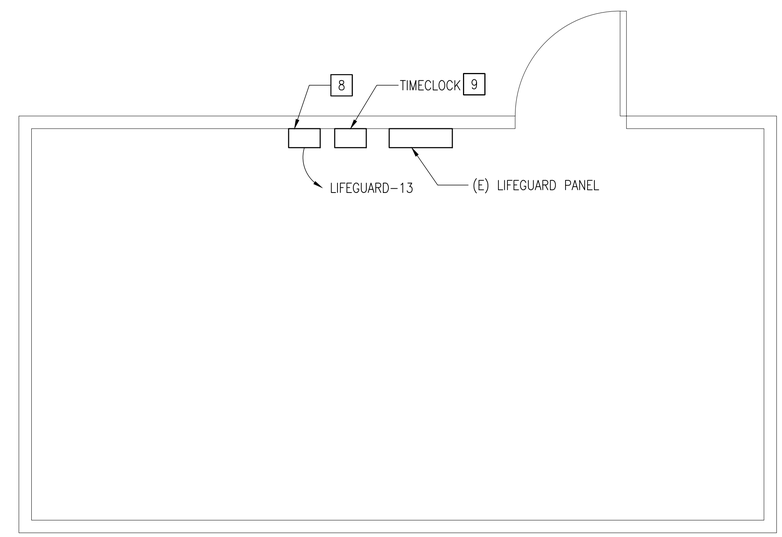

2 ENLARGED LIFEGUARD STATION PLAN
SCALE: 1/2" = 1'-0"

NORTH

0 1/2' 1' 2' 4'
SCALE: 1/2"=1'-0"

BSE ENGINEERING, INC.
9903 BUSINESS PARK AVE, SUITE 104
SAN DIEGO, CA 92131
TEL: 858.800.6000
FAX: 858.800.6001
BSE PROJECT NO. 22-217-1023

REGISTERED PROFESSIONAL ENGINEER
ALAN J. BROWN
No. 13353
Exp. 09-30-22
ELECTRICAL
STATE OF CALIFORNIA

RECORD DRAWING REVIEWED BY: PROJECT-MANAGER/ENGINEER DATE	NOTE: THIS DRAWING MAY BE A REDUCED SCALE PRINT OF THE ORIGINAL DRAWING. UTILIZE GRAPHIC SCALES TO VERIFY IF DRAWING IS A REDUCTION, AND ADJUST SCALES ACCORDINGLY TO THE GRAPHIC SCALES SHOWN.	SPEC NO. 2022-07 WBS NO. EC-0008-01 REFERENCES - PROJECT ENGINEER - CONTRACTOR - CONSTRUCTION STARTED - CONSTRUCTION COMPLETED - COST - INSPECTOR -	REVISIONS	DATE / APPROVED	PORT of SAN DIEGO Waterfront of Opportunity	DESIGNED A. BROWN DRAWN J. CARNAHAN CHECKED B. WOUTERS	APPROVAL RECOMMENDED X. XXXX PROJECT MANAGER APPROVED Chris Brooke 8/10/22 X. XXXX ENGINEERING/CONSTRUCTION DEPARTMENT MANAGER

SAN DIEGO UNIFIED PORT DISTRICT

IMPERIAL BEACH PIER
ENHANCEMENTS - PHASE 2

ENLARGED PLANS

DATE	JUNE 27, 2022
A/E NO.	E-201
SHEET 28 OF 30	
DRAWING NO.	REV.
IB-2022-01	-

K:\Projects\Moffat & Nichol - 217\22-1023 IB Pier Enhancements\Dwgs\CAD v2018\Elec\22-217-1023-E-201.dwg / Jul 06, 2022 - 2:46pm / epotts

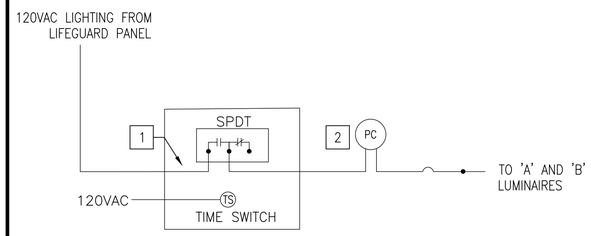

DETAIL NOTES:

1. ELECTRONIC TIME SWITCH, TORK MODEL #DWZ200B TIME SWITCH OR EQUAL. PROGRAM AS DIRECTED BY OWNER. TIME SWITCH SHALL BE TWO ZONE ASTRONOMICAL LIGHTING CONTROL TYPE FOR ON AND OFF CONTROL OF LIGHTING CIRCUITS.
2. PROVIDE 120V PHOTOCELL CONTROLLERS WITH 1/2" THREADED NIPPLE. MOUNTED TO 4" X 4" JBOX MOUNTED ON ROOF.

EXTERIOR LIGHTING CONTROL DIAGRAM | SCALE NTS | 1

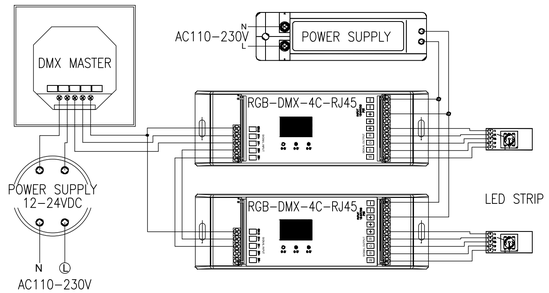

LUMINAIRE A CONTROL WIRING DIAGRAM | SCALE NTS | 2

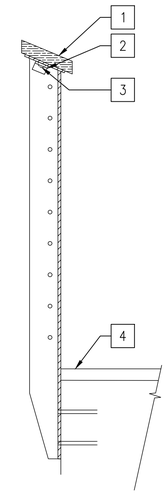

DETAIL NOTES:

1. HANDRAIL
2. B TYPE LUMINAIRE AND MOUNTING HARDWARE ON THE UNDERSIDE OF THE HANDRAIL.
3. 3/4"C COMING FROM JUNCTION BOX.
4. EXISTING DECK

LIGHTING MOUNTED TO HANDRAIL- SIDE VIEW | SCALE NTS | 3

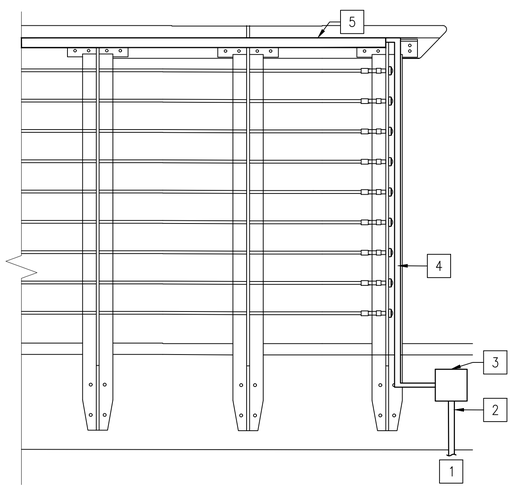

DETAIL NOTES:

1. CONDUIT FROM UNDERSIDE OF DECK.
2. 1" PVC SCHEDULE 80 CONDUIT.
3. STAINLESS STEEL MARINE GRADE JUNCTION BOX.
4. PVC COATED RIGID CONDUIT.
5. SURFACE MOUNTED B TYPE LUMINAIRE ON THE UNDERSIDE OF THE HANDRAIL.

LIGHTING MOUNTED TO HANDRAIL - FRONT VIEW | SCALE NTS | 4

BSE ENGINEERING, INC.
9903 BUSINESS PARK AVE, SUITE 104
SAN DIEGO, CA 92131
TEL: 858.800.6000
FAX: 858.800.6001
BSE PROJECT NO. 22-217-1023

REGISTERED PROFESSIONAL ENGINEER
ALAN J. BROWN
No. 13353
Exp. 09-30-22
ELECTRICAL
STATE OF CALIFORNIA

RECORD DRAWING
REVIEWED BY:
PROJECT-MANAGER/ENGINEER
DATE

NOTE:
THIS DRAWING MAY BE A REDUCED SCALE PRINT OF THE ORIGINAL DRAWING. UTILIZE GRAPHIC SCALES TO VERIFY IF DRAWING IS A REDUCTION, AND ADJUST SCALES ACCORDINGLY TO THE GRAPHIC SCALES SHOWN.

SPEC NO. 2022-07	WBS NO. EC-0008-01
REFERENCES -	
PROJECT ENGINEER -	
CONTRACTOR -	
CONSTRUCTION STARTED -	
CONSTRUCTION COMPLETED -	
COST -	INSPECTOR -

REVISIONS | DATE / APPROVED

PORT of SAN DIEGO
Waterfront of Opportunity

DESIGNED A. BROWN
DRAWN J. CARNAHAN
CHECKED B. WOUTERS

APPROVAL RECOMMENDED
X. XXXX
PROJECT MANAGER
APPROVED
Chris Brooks 8/10/22
X. XXXX
ENGINEERING/CONSTRUCTION DEPARTMENT MANAGER

SAN DIEGO UNIFIED PORT DISTRICT

IMPERIAL BEACH PIER
ENHANCEMENTS - PHASE 2

ELECTRICAL DETAILS

DATE JUNE 27, 2022
A/E NO. E-501
SHEET 29 OF 30
DRAWING NO. IB-2022-01
REV. -

K:\Projects\Moffat & Nichol - 217\22-1023 IB Pier Enhancements\Dwgs\CAD v2018\Elec\22-217-1023-E-501.dwg / Jul 06, 2022 - 2:46pm / epotts

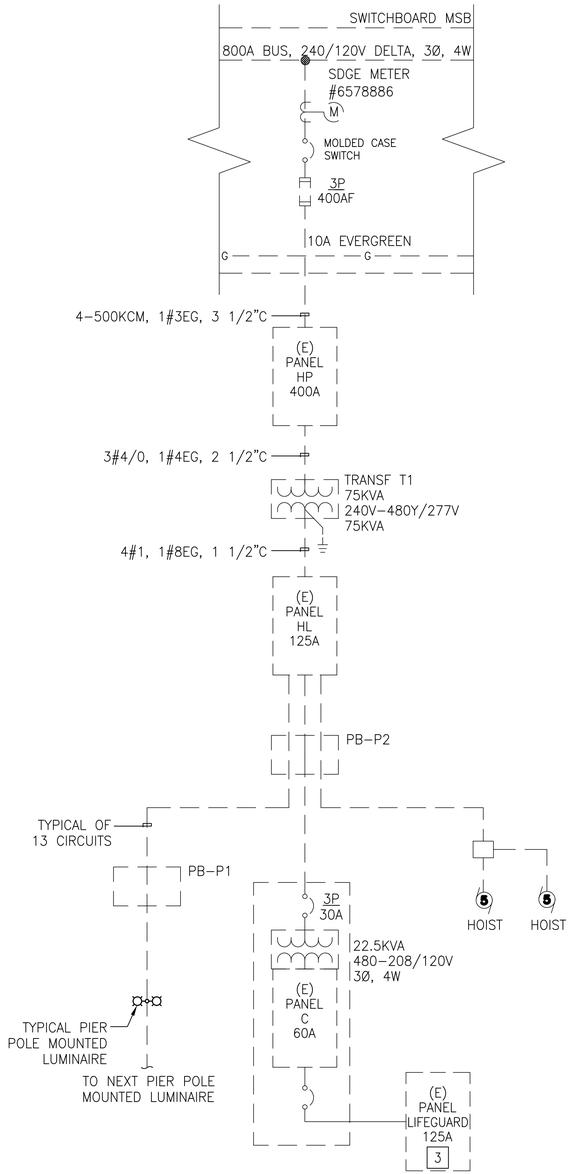

1 SINGLE LINE DIAGRAM
SCALE: NO SCALE

GENERAL NOTES

1. CONTRACTOR TO VERIFY PANEL LOADS AND CIRCUITRY PRIOR TO BEGINNING WORK.

KEY NOTES

1. CONTRACTOR TO PROVIDE REVISED PANEL DIRECTORY UPON COMPLETION.
2. PROVIDE 20A, 1-POLE CIRCUIT BREAKER. MATCH EXISTING MANUFACTURER AND KAIC RATING OF THE PANELBOARD.
3. UTILIZE EXISTING PANEL FOR NEW WORK.

1 PANEL LIFEGUARD

ROOM LIFEGUARD STATION
MOUNTING SURFACE
FED FROM PANEL C
NOTE

VOLTS 208Y/120V 3P 4W
BUS AMPS 125
NEUTRAL 100%

AIC 10,000
MAIN BKR 100
LUGS STANDARD

CKT #	CKT BKR	CIRCUIT DESCRIPTION	LOAD VA A	LOAD VA B	LOAD VA C	CKT #	CKT BKR	CIRCUIT DESCRIPTION	LOAD VA A	LOAD VA B	LOAD VA C
1	100/3	MAIN	0			2	20/1	EXISTING LOAD	0		
3	|			0		4	20/1	EXISTING LOAD		0	
5	|				0	6	20/1	EXISTING LOAD			0
7	20/1	EXISTING LOAD	0			8	20/1	EXISTING LOAD	0		
9	20/1	EXISTING LOAD		0		10	20/1	EXISTING LOAD		0	
11	20/1	EXISTING LOAD			0	12	20/1	EXISTING LOAD			0
2 13	20/1	CANOPY AND HANDRAIL LIGHTING	500			14	-/1	PROVISION	0		
15	-/1	PROVISION		0		16	-/1	PROVISION		0	
17	-/1	PROVISION			0	18	-/1	PROVISION			0
								TOTAL CONNECTED VA BY PHASE	500	0	0
								TOTAL CONNECTED AMPS BY PHASE	4	0	0

	CONN VA	CALC VA	
LIGHTING	500	625	(125%)
LARGEST MOTOR	0	0	(N/A)
OTHER MOTORS	0	0	(100%)
RECEPTACLES	0	0	(50%>10)
KITCHEN EQUIP	0	0	(N/A)

	CONN VA	CALC VA	
CONTINUOUS	0	0	(125%)
HEATING	0	0	(N/A)
COOLING	0	0	(N/A)
NONCONTINUOUS	0	0	(100%)
DIVERSE	0	0	(N/A)
METERED DEMAND	0	0	(125%)
TOTAL KVA	500	625	
BALANCED 3-PHASE AMPS		2	

2 PANEL SCHEDULE
SCALE: NO SCALE

BSE ENGINEERING, INC.
9903 BUSINESS PARK AVE, SUITE 104
SAN DIEGO, CA 92131
TEL: 858.800.6000
FAX: 858.800.6001
BSE PROJECT NO. 22-217-1023

REGISTERED PROFESSIONAL ENGINEER ALAN J. BROWN No. 13353 Exp. 09-30-22 ELECTRICAL STATE OF CALIFORNIA

RECORD DRAWING
REVIEWED BY:
PROJECT-MANAGER/ENGINEER
DATE

NOTE:
THIS DRAWING MAY BE A REDUCED SCALE PRINT OF THE ORIGINAL DRAWING. UTILIZE GRAPHIC SCALES TO VERIFY IF DRAWING IS A REDUCTION, AND ADJUST SCALES ACCORDINGLY TO THE GRAPHIC SCALES SHOWN.

SPEC NO. 2022-07 WBS NO. EC-0008-01
REFERENCES -
PROJECT ENGINEER -
CONTRACTOR -
CONSTRUCTION STARTED -
CONSTRUCTION COMPLETED -
COST - INSPECTOR -

REVISIONS | DATE / APPROVED

PORT of SAN DIEGO
Waterfront of Opportunity

DESIGNED A. BROWN
DRAWN J. CARNAHAN
CHECKED B. WOUTERS

APPROVAL RECOMMENDED
X. XXXX
PROJECT MANAGER
APPROVED Chris Brooke 8/10/22
X. XXXX
ENGINEERING/CONSTRUCTION DEPARTMENT MANAGER

SAN DIEGO UNIFIED PORT DISTRICT
IMPERIAL BEACH PIER ENHANCEMENTS - PHASE 2
SINGLE LINE DIAGRAM

DATE JUNE 27, 2022
A/E NO. E-601
SHEET 30 OF 30
DRAWING NO. IB-2022-01
REV. -

K:\Projects\Moffat & Nichol - 217\22-1023 IB Pier Enhancements\Dwgs\CAD v2018\Elec\22-217-1023-E-601.dwg / Jul 06, 2022 - 2:46pm / epotts